OAKDALE IRRIGATION DISTRICT

CONTRACT DOCUMENTS
FOR
OAKDALE IRRIGATION DISTRICT
SOUTH MAIN CANAL AND TUNNEL IMPROVEMENTS
TUNNEL 8 REHABILITATION

Prepared by
Condor Earth
21663 Brian Lane
Sonora, CA 95370
209.532.0361

July 21, 2021
Condor Project No. 3818R

TABLE OF CONTENTS

Division 00 – Bidding Requirements

Division 01 – General Requirements

Division 02 – Site and Ground Technical Specifications

Division 03 – Concrete Technical Specifications

Contract Drawings – Reduced Scale Set

X:\Project\3000_prj\3818R OID Tunnel 8\Reports\Contract Docs_Specs\Cover_Tabs_Spines\Cover Page_TOC 20210721.docx

DIVISION 00

SECTION 00100

PROJECT DESCRIPTION

PROJECT DESCRIPTION

OAKDALE IRRIGATION DISTRICT
South Main Canal and Tunnels Improvements
Tunnel 8 Rehabilitation
Knights Ferry, California

INTRODUCTION

The existing Oakdale Irrigation District (OID, District, Owner) main canals and tunnels were originally completed in 1912 and were enlarged in 1947. Condor Earth (Condor, Engineer) performed hazard assessments starting in 2003 to identify areas in need of repair along OID's canal and tunnel alignments, one of which areas is the South Main Canal and Tunnels.

The Project is located in Stanislaus County, California, near the town of Knights Ferry, as shown on Figure 1, Vicinity Map.

Water flows within the South Main Canal (from its source at Goodwin Pool behind Goodwin Dam) will be suspended during the winter months, from November 1, 2021 to February 28, 2022; the work covered by this Contract shall be completed during this period.

Tunnel 8 is accessed from Willms Road as shown on Figure 2, Site Map. Figure 2 shows the locations of the permissible staging and laydown areas for the Project, which are located in the vicinity of Knights Ferry.

Although water flow from the canal source at Goodwin Dam will be suspended, stormwater runoff will collect and flow in the canal during construction. Circumventing schedule delay, and/or any damages to equipment, or materials used to conduct the work, due to stormwater flows in the canal during construction will be the responsibility of the Contractor. The Contractor shall also be responsible for all stormwater permitting compliance as required. The "Stormwater Management – Tunnel 8" memo, which is attached to this Section, provides pertinent information regarding site conditions the Contractor shall consider regarding stormwater management.

Scope of Work

The proposed Project will include improvements to the existing Tunnel 8; install temporary water diversion measures in the canal, de-water Tunnel 8 and nearby canal as necessary, scale loose rock and enlarge Tunnel 8 sidewalls, crown and invert per plan, place new shotcrete tunnel lining closely behind the tunnel scaling/enlarging as work progresses, remove debris from the tunnel (at

various times in the construction sequence), place new cast-in-place concrete tunnel invert, and install final erosion control measures.

Approximate Construction Contract Value

The Project described herein shall be in one construction contract. Use of subcontractors and/or joint ventures is acceptable, provided however that only one entity is responsible for the Work. **A valid Class "A" Contractor's License is required to complete this Project**, and a responsible Bidder criteria and bonding capability will be established. **Bid Bond Security, Payment Bond and Performance Bond will be required for this work**. Construction quantities are approximate and based on field measurements and not surveyed values. Baseline bid costs will be determined based on current estimated quantities in the bid document and Contractor bid unit prices. The total contract price will be determined based on units consumed and lump sum items. **This Project requires the Contractor and Subcontractors to pay prevailing wages to all eligible employees**.

The Engineer's Estimate of Probable Construction Costs for the project is $1.1M.

Unit Quantities

The Owner reserves the right to adjust unit quantities to greater or lesser than twenty-five percent (25%) of the Total Bid Schedule quantities without change to the Contractor's Bid Unit Price.

- END OF SECTION 00100 -

X:\Project\3000_prj\3818R OID Tunnel 8\Reports\Contract Docs_Specs\DIV 00\00100 Project Description 20210721.docx

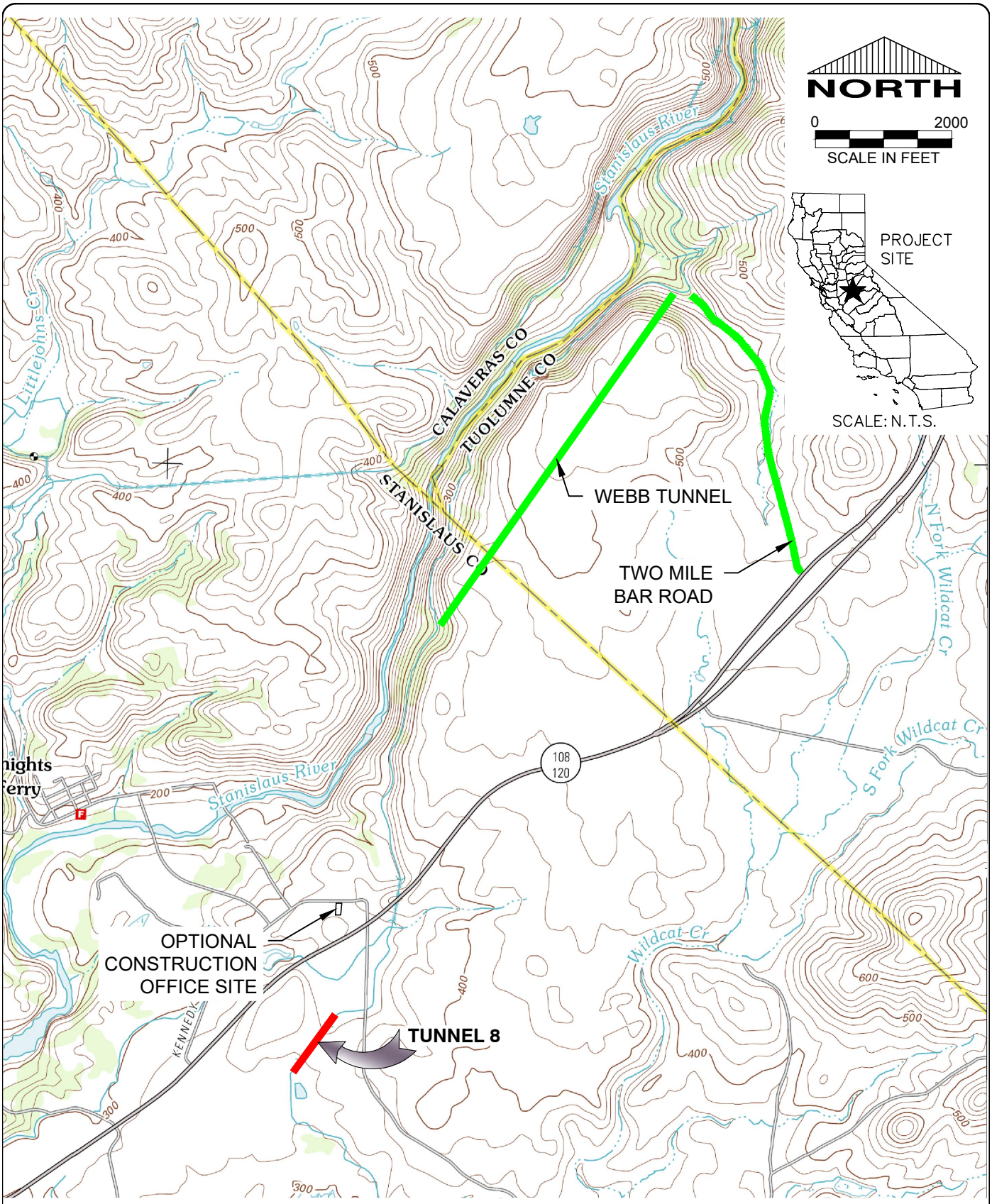

BACKGROUND IMAGE: USGS 7.5 MINUTE QUADRANGLE, KNIGHTS FERRY 2012

CONDOR EARTH
21663 Brian Lane
P.O. Box 3905
Sonora, CA 95370
(209) 532-0361
fax(209) 532-0773
www.condorearth.com

Job No.	3818R
Date	14 JUNE 2021
Scale	AS SHOWN
Drawn	KGM
Chk'd	ASK

VICINITY MAP
TUNNEL 8 SOUTH MAIN CANAL
OAKDALE IRRIGATION DISTRICT
STANISLAUS COUNTY
KNIGHTS FERRY, CALIFORNIA

FIGURE 1

3818R_F1

X:\Project\3000_prj\3818R OID Tunnel 8\3818R_CAD\DWG\GEOTECH\3818R_F1.dwg 6-16-21 03:06:46 PM kmckinley

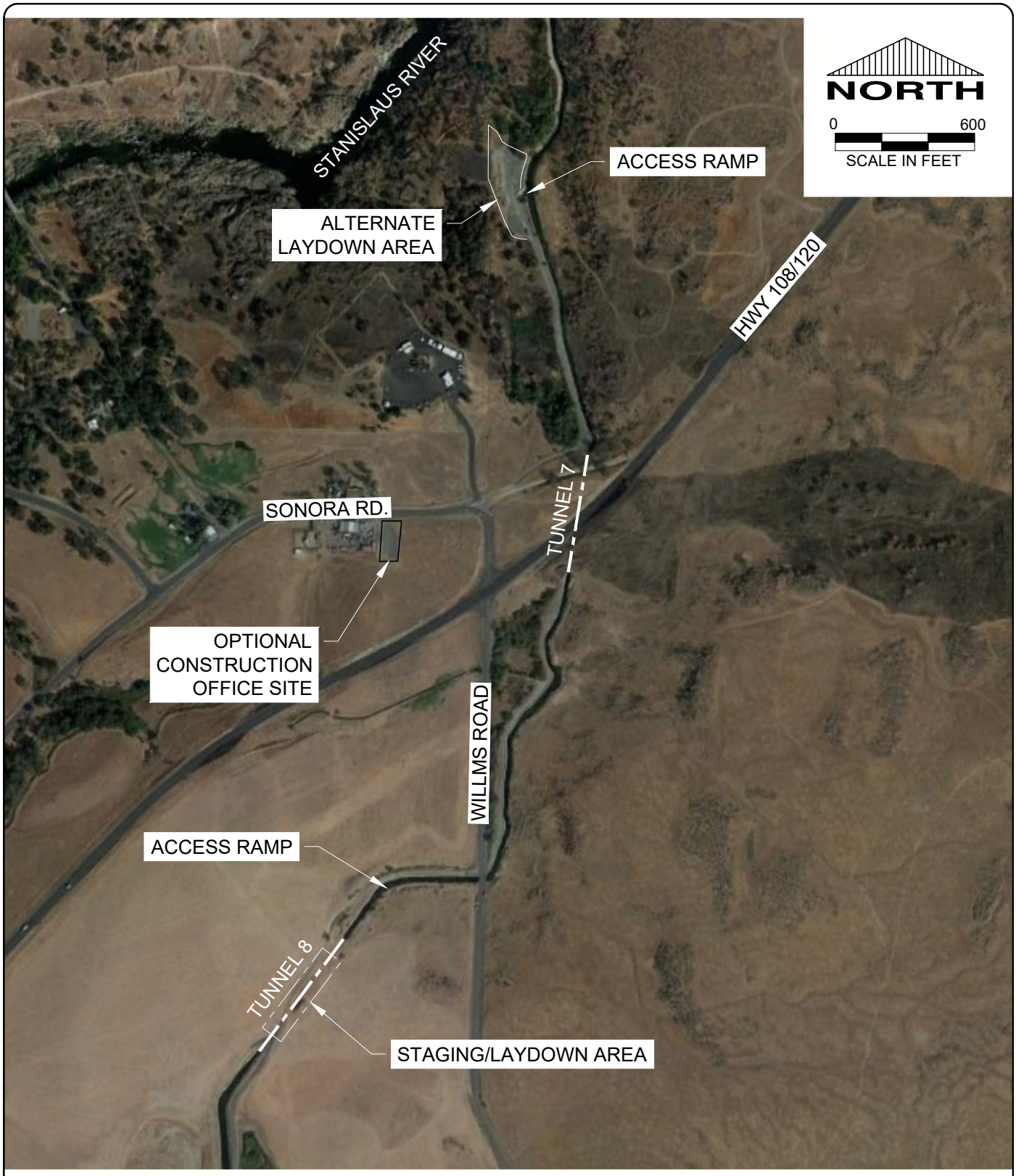

BACKGROUND IMAGE: GOOGLE EARTH 9/27/2020

CONDOR EARTH
21663 Brian Lane
P.O. Box 3905
Sonora, CA 95370
(209) 532-0361
fax(209) 532-0773
www.condorearth.com

Job No.	3818R
Date	14 JUNE 2021
Scale	AS SHOWN
Drawn	KGM
Chk'd	SWL

SITE MAP
TUNNEL 8 SOUTH MAIN CANAL
OAKDALE IRRIGATION DISTRICT
STANISLAUS COUNTY
KNIGHTS FERRY, CALIFORNIA

FIGURE
2

3818R_F2

X:\Project\3000_prj\3818R OID Tunnel 8\3818R_CAD\DWG\GEOTECH\3818R_F2.dwg 6-16-21 03:11:16 PM kmckinley

MEMORANDUM
STORMWATER MANAGEMENT
TUNNEL 8 REHABILITATION
SOUTH MAIN CANAL AND TUNNEL IMPROVEMENTS PROJECT

INTRODUCTION

This memorandum establishes the Contractor's and the Oakdale Irrigation District's (OID) responsibilities for the installation and management of the Stormwater Management Plan elements for Tunnel 8 of the South Main Canal and Tunnel Improvements Project. The runoff in the Project area can impact any construction operation if the necessary precautions are not taken to handle the runoff. In the Bid Documents, the Contractor is provided a precipitation log for the previous 17 years (Table 1).

The Contractor shall be aware and also shall manage the runoff during the construction phase of this Project. As stated, the historical records have been provided to the Contractor to develop and price the Stormwater Management for the Project. In order to do this effectively, the Contractor shall have certain responsibilities and OID will have certain responsibilities. These are addressed in the following narrative.

OID RESPONSIBILITIES

OID will open and lock the primary spill between Goodwin Dam and the Project site, which is located at Two Mile Bar Road (Sketch 1). This spill will be locked open for the duration of the Project. The turnout located immediately upstream of Tunnel 7 (Sketch 3) will also be locked in the open position for the duration of the Project. OID will unlock the control valve at the canal plug located adjacent to the Webb Tunnel downstream portal (Sketch 2); this valve shall be available for operation by the Contractor for the duration of the Project.

CONTRACTOR'S RESPONSIBILITIES

The Contractor shall be responsible for managing the stormwater runoff for the duration of the Project. The Contractor shall submit a Stormwater Management Plan within 2 weeks following the Notice-To-Proceed. As noted above, the primary spill for stormwater above the Project site and below Goodwin Dam is at Two-Mile Bar. The Contractor shall provide a minimum 4-foot high check dam immediately downstream of the Two-Mile Bar spill, prior to November 15, 2021, to enhance stormwater spill flows at that location; the Contractor shall remove the check dam and restore the check dam site prior to Project Substantial Completion. The Contractor shall be capable of bypassing a minimum stormwater flow of 1,500 gallons-per-minute (3.3 CFS) through the canal jobsite. The Contractor shall be responsible for the design and implementation of all elements of the Stormwater Management Plan in the SWPPP submittal, which shall follow and be in compliance with the Best Management Practices (BMP's).

HISTORICAL RAINFALL

Records of rainfall are available since 1885 by month. Information for this Project has been provided to the Contractor for the period from 2005 to 2020. For informational purposes, the average historical rainfall is 12.72 inches per year for the period from 2005 to 2020. Again, for information, the maximum amount of rainfall occurred during the winter (December through March) of 2005-2006, was 37.11 inches. The minimum amount rainfall occurred during the winter of 2011-2012 and was 4.65 inches.

Also included in Table 1 is the average amount of rainfall by month. This shows the greatest amount of average rainfall will occur in the month of January, followed by December. The flow through the South

Main Canal from stormwater is not only dictated by rainfall, but also the duration and severity of the storm(s) as well as the saturation level of the ground in the surrounding water shed. The best construction schedule in terms of avoiding canal stormwater flows is to start immediately after the irrigation season ends on November 1 and complete as much work as possible before the end of December.

ATTACHMENTS

Table 1 – Monthly Precipitation by Year
Sketches 1, 2 and 3 – Tunnel 8 Stormwater Management

TABLE 1
Monthly Precipitation by Year
CIMIS Region San Joaquin Valley
Station - Oakdale (Station ID 194)

Year	Jan	Feb	Mar	Apr	May	June	July	Aug	Sep	Oct	Nov	Dec	Total/Yr
2005	3.28	2.80	3.15	0.91	1.13	0.13	0.00	0.00	0.19	0.07	0.31	3.51	15.48
2006	28.44	0.86	4.30	3.20	0.93	0.00	0.00	0.00	0.00	0.24	0.90	2.07	40.94
2007	0.58	2.87	0.53	1.05	0.07	0.00	0.00	0.00	0.08	1.13	0.40	2.22	8.93
2008	5.07	1.65	0.05	0.01	0.10	0.00	0.00	0.00	0.00	0.26	0.95	1.59	9.68
2009	1.13	2.06	0.77	0.69	0.72	0.26	0.00	0.00	0.24	1.43	0.17	1.69	9.16
2010	3.83	2.64	1.63	2.60	1.07	0.09	0.00	0.00	0.00	1.33	2.31	3.67	19.17
2011	1.43	2.61	3.30	0.17	0.68	1.22	0.00	0.00	0.00	1.05	0.72	0.00	11.18
2012	1.22	1.06	2.37	1.93	0.01	0.20	0.01	0.00	0.00	0.24	2.13	4.07	13.24
2013	1.25	0.39	0.87	0.39	0.01	0.07	0.00	0.00	0.24	0.00	0.85	0.24	4.31
2014	0.01	2.66	1.93	0.77	0.00	0.02	0.00	0.00	0.13	0.78	1.24	5.02	12.56
2015	0.10	2.12	0.20	1.42	0.50	0.00	0.00	0.00	0.00	0.24	1.92	2.63	9.13
2016	4.78	0.52	3.83	1.74	0.23	0.00	0.00	0.00	0.00	2.07	0.03	----	13.20
2017	0.01	4.38	1.87	1.76	0.22	0.00	0.00	0.00	0.00	0.13	1.15	0.08	9.60
2018	2.65	0.24	2.70	2.67	0.24	0.00	0.00	0.00	0.00	0.00	2.68	1.99	13.17
2019	1.89	3.19	2.63	0.46	2.13	0.00	0.00	0.00	0.14	0.00	0.72	3.01	14.20
2020	0.86	0.03	1.97	1.93	0.26	0.00	0.00	0.00	0.00	0.00	0.19	1.75	7.00
2021	3.28	1.02	0.94	0.04	0.00	---	---	---	---	---	---	---	5.28
Average	3.52	1.83	1.94	1.28	0.49	0.12	0.00	0.00	0.06	0.56	1.04	2.24	12.72

Inches
13.18 **2005- 2020 (16-year) Average Calendar Yr Total Precipitation**

Inches
12.72 **2005/06-2020/21 (17-year) Average Annual Total Precipitation**

NORTH

0 100
SCALE IN FEET

BACKGROUND IMAGE: GOOGLE EARTH, IMAGERY DATED 9/27/2020

DISCLAIMER: THIS PLAN REPRESENTS FEATURES FOR ILLUSTRATION PURPOSES ONLY. IT IS NOT A LEGAL SURVEY AND IS NOT INTENDED FOR USE IN DETERMINING BOUNDARIES. ANY USE OF THIS PLAN FOR PURPOSES OTHER THAN LOCATION OF FEATURES IS DONE SO AT THE USER'S RISK AND WITHOUT THE CONSENT OF CONDOR EARTH.

OAKDALE IRRIGATION EDISTRICT

TUNNEL 8 - STORMWATER MANAGEMENT

CONDOR EARTH
21663 Brian Lane
P.O. Box 3905
Sonora, CA 95370
(209) 532-0361
fax(209) 532-0773
www.condorearth.com

SKETCH 1

JOB#: 3818R	DRAWN: KGM	SCALE: AS SHOWN
PRINTED: 14 JUNE 2021	CHECKED: SWL	3818R_SK1-3

X:\Project\3000_prj\3818R OID Tunnel 8\3818R_CAD\DWG\GEOTECH\3818R_SK1-3.dwg 6-14-21 02:47:34 PM kmckinley

NORTH

0 100
SCALE IN FEET

BACKGROUND IMAGE: GOOGLE EARTH, IMAGERY DATED 9/27/2020

DISCLAIMER: THIS PLAN REPRESENTS FEATURES FOR ILLUSTRATION PURPOSES ONLY. IT IS NOT A LEGAL SURVEY AND IS NOT INTENDED FOR USE IN DETERMINING BOUNDARIES. ANY USE OF THIS PLAN FOR PURPOSES OTHER THAN LOCATION OF FEATURES IS DONE SO AT THE USER'S RISK AND WITHOUT THE CONSENT OF CONDOR EARTH.

OAKDALE IRRIGATION EDISTRICT

TUNNEL 8 - STORMWATER MANAGEMENT

CONDOR EARTH
21663 Brian Lane
P.O. Box 3905
Sonora, CA 95370
(209) 532-0361
fax(209) 532-0773
www.condorearth.com

SKETCH 2

JOB#: 3818R	DRAWN: KGM	SCALE: AS SHOWN
PRINTED: 14 JUNE 2021	CHECKED: SWL	3818R_SK1-3

X:\Project\3000_prj\3818R OID Tunnel 8\3818R_CAD\DWG\GEOTECH\3818R_SK1-3.dwg 6-14-21 02:50:54 PM kmckinley

NORTH

0 500
SCALE IN FEET

BACKGROUND IMAGE: GOOGLE EARTH, IMAGERY DATED 9/27/2020

DISCLAIMER: THIS PLAN REPRESENTS FEATURES FOR ILLUSTRATION PURPOSES ONLY. IT IS NOT A LEGAL SURVEY AND IS NOT INTENDED FOR USE IN DETERMINING BOUNDARIES. ANY USE OF THIS PLAN FOR PURPOSES OTHER THAN LOCATION OF FEATURES IS DONE SO AT THE USER'S RISK AND WITHOUT THE CONSENT OF CONDOR EARTH.

OAKDALE IRRIGATION EDISTRICT

TUNNEL 8 - STORMWATER MANAGEMENT

CONDOR EARTH
21663 Brian Lane
P.O. Box 3905
Sonora, CA 95370
(209) 532-0361
fax(209) 532-0773
www.condorearth.com

SKETCH 3

JOB#: 3818R	DRAWN: KGM	SCALE: AS SHOWN
PRINTED: 14 JUNE 2021	CHECKED: SWL	3818R_SK1-3

X:\Project\3000_prj\3818R OID Tunnel 8\3818R_CAD\DWG\GEOTECH\3818R_SK1-3.dwg 6-16-21 03:14:14 PM kmckinley

SECTION 00200

NOTICE INVITING BIDS

Notice is hereby given that the Board of Directors of Oakdale Irrigation District will receive Bids for certain work performed in accordance with Contract Plans and Specifications (Contract Documents) via email to ethorburn@oakdaleirrigation.com with copy to slewis@condorearth.com and ktarantino@condorearth.com before 2:30 pm on Monday, September 13, 2021 for construction of:

Tunnel 8 Rehabilitation
Stanislaus County

At said time, and promptly thereafter, all Bids that have been duly received in accordance with the Contract Documents will be opened via video conference line (link to be provided to registered plan holders and posted on the District website at least 48 hours prior to bid opening)..

In accordance with plans and specifications prepared for OWNER by Condor Earth (Condor), the Work includes the furnishing of all labor, materials, taxes, equipment and services for the construction of the Tunnel 8 Rehabilitation Project. Refer to Section 00100 Project Description for additional detail and refer to Section 00300 for Instructions for Bidders.

The Start Work, Substantial and Final Completion for the Contract shall be as follows:

Start Work	TBD – Not before 11/8/2021
Substantial Completion	2/19/2022
Final Completion	3/31/2022

Contract Documents for the work to be constructed may be seen at the office of the Oakdale Irrigation District (District) by appointment only or in PDF format on the District's Website at www.oakdaleirrigation.com after July 21, 2021. The Contract for the Work advertised will be awarded to the lowest responsible Bidder, but the Board of Directors of Oakdale Irrigation District reserves the right to reject any and all Bids.

The following instructions are listed in detail in Contract Documents Section 00300 Instructions for Bidders, and listed here for reference and convenience:

- A mandatory pre-bid conference will be held at 9:00 am on August 5, 2021 at the District Office
- Questions regarding the bid shall be submitted no later than 5 working days prior to the bid deadline
- Addenda, reference documents and video pertaining to this Project will be made available on the District's website

The Bid must be on forms contained in the Contract Documents for the Tunnel 8 Rehabilitation Project located at the Owner's office or website as set forth above. Bid is to be provided as a PDF document and email subject noted "South Main Canal Improvements – Tunnel 8 Rehabilitation" and must be delivered up to but not later than the specified time and date.

Bids shall be accompanied by a cashier's or certified check payable to the order of the District delivered to office before 2:30 pm on Monday, September 13, 2021, amounting to ten percent (10%) of the Bid, or by a bond in said amount and payable to the District signed by the Bidder and a corporate surety, or by the Bidder and two sureties who shall justify before any officer competent to administer an oath, in double the amount and over and above all statutory exemptions. In the event that the Bidder fails, within five (5) days after written notice that the Contract has been awarded to him, to enter into a Contract with the District, the District may award the Contract to the second lowest responsible Bidder. In such event, the amount of Bidder's security shall be applied by the District to the difference between the Bidder's Bid and the second lowest responsible Bid, and the surplus, if any, shall be returned to the Bidder if cash or a check is used, or to the surety on Bidder's bond if a bond is used.

Contractor shall provide a Faithful Performance Bond and a Labor and Materials Bond, in the sum of one hundred percent (100%) of the contract price; the Bonds, if any, shall be in the format specified by the District. The Faithful Performance Bond will be retained by the District for twelve (12) months following final acceptance by the District of the improvements constructed to guarantee correction of failures attributable to workmanship and materials. Upon the final acceptance by the District, the amount of the Faithful Performance Bond may be reduced to twenty percent (20%) of the actual improvement construction costs.

Prior to commencement of work for the public project, the Engineer for the District shall prepare and file in the Engineer's office either complete and accurate plans and specifications or a work authorization describing the Work to be performed.

The Engineer is Condor Earth, located at 21663 Brian Lane, Sonora, California, telephone (209) 532-0361, attention Scott Lewis (email slewis@condorearth.com, copy to Kim Tarantino email ktarantino@condorearth.com).

Contractor may substitute securities in lieu of retained funds withheld by the District in accordance with California PCC § 22300.

Contractor will be required to pay to each craft, classification or type of workman the prevailing wage determined by the State of California, Director of Industrial Relations, in the published wage scale determination, and to comply with California Labor Code §§1777.5, 1776.

Contractor will be required to post all jobsite notices prescribed by law or regulation.

No contractor or subcontractor may be listed on a bid proposal for a public works project (submitted on or after March 1, 2015) unless registered with the California Department of Industrial Relations ("DIR") pursuant to labor code section 1725.5. To register log on to the DIR website:

https://efiling.dir.ca.gov/PWCR/ActionServlet?action=displayPWCRegistrationForm

This project is subject to compliance monitoring and enforcement by the DIR.

Contractor shall possess a valid Class "A" Contractor's License at the time of bid, award of the Contract, and during performance of the Contract.

- END OF SECTION 00200 -

X:\Project\3000_prj\3818R OID Tunnel 8\Reports\Contract Docs_Specs\DIV 00\00200 Notice Inviting Bids 20210721.docx

SECTION 00300

INSTRUCTIONS FOR BIDDERS

1. OBTAINING COPIES OF CONTRACT DOCUMENTS

   A. Bidders may view complete sets of the Contract Documents at the location designated in Contract Specifications Section 00200 Notice Inviting Bids. These same documents will be made available in PDF format on the Oakdale Irrigation District (OID) website via download for the convenience of the Bidder. The hardcopy at the location described in Contract Specification Section 00200 shall be the official Bid Set.

   B. Bidders shall use complete sets of Contract Documents in preparing Bids.

   C. OID makes copies of the Contract Documents available, on the above terms, for the sole purpose of obtaining Bids for the Work and does not confer a license or grant permission for any other use of the Contract Documents.

2. FORM OF BID

   A. Bids must be made on the regular Bid Forms which are made a part of these Contract Documents. One Bid is to be provided as a PDF file and email subject noted as required in Contract Specifications Section 00200 Notice Inviting Bids. The Bids must be signed by the individual or by the proper officials of the firm or corporation by which the Bid is made. The right is reserved to reject any and all Bids and to waive technical defects as the interests of the OID require.

   B. Bids must be valid for ninety (90) days following the date of the Bid.

   C. Copies of the Bid Form may be obtained as described in Contract Specifications Section 00200. The Contractor is responsible for submitting complete and current Bid Forms.

   D. The Bids shall include all portions of the following Sections:

00400	Noncollusion Affidavit
00502	Indemnity Agreement
00503	Guaranty
00530	Bid
00531	Acknowledgment of Receipt of Addenda
00540	List of Subcontractors and Suppliers
00550	Bidder’s Responsibility Statement
00601	Bid Bond

00602	Performance Bond
00603	Payment Bond
01100	General Conditions

3. INTERPRETATION OR CORRECTION OF CONTRACT DOCUMENTS

A. Bidder shall, before submitting its Bid, carefully study and compare the components of the Contract Documents and shall examine the Project Site, the conditions under which the Work is to be performed, and the local conditions.

B. In the event the Bidder has any question as to the meaning of any part of the Contract Documents, or Bidder finds any error, inconsistency, or ambiguity in the Contract Documents, Bidder shall make a written Request for Clarification prior to submitting its Bid. Requests for Clarification or interpretation of the Contract Documents shall be addressed only to the OID Representative – the Engineer – designated in Contract Specifications Section 00200 Notice Inviting Bids. It shall be the Bidder's responsibility to ensure that any such requests be submitted to the OID Representative in a timely manner, but no later than 5 working days prior to the Bid Deadline, in order to allow for the OID Representative to issue a written Addenda, if required.

C. If necessary, the Engineer shall make clarifications, interpretations, corrections, and changes to the Contract Documents by Addenda issued as provided below. Purported clarifications, interpretations, corrections, and changes to the Contract Documents made in any other manner shall not be binding on OID, and Bidders shall not rely upon them.

4. ADDENDA

A. Addenda will be issued by electronic mail. The OID Representative will make reasonable efforts to deliver Addenda to all Bidders who are known by OID to have received a complete set of Contract Documents and who have provided an electronic mail address for receipt of Addenda. OID makes no guarantee that all Bidders will receive all the Addenda.

B. Copies of Addenda will be made available for inspection at the office and on the website where the Contract Documents are on file for inspection, as indicated in Contract Specifications Section 00200 Notice Inviting Bids.

C. Addenda withdrawing the "Notice Inviting Bids" or postponing the Bid Deadline may be issued any time prior to the Bid Deadline. However, if any Addenda results in a material change to the Contract Documents, the Bid Deadline shall be extended by OID by not less than seventy-two (72) hours, pursuant to California PCC § 4104.5. All Addenda with material changes will be issued not less than seventy-two (72) hours of Bid due date and time.

D. Each Bidder shall be responsible for ascertaining, prior to submitting its Bid, that it has received all issued Addenda. Each Bidder shall acknowledge receipt of all Addenda as indicated in Contract Specifications Section 00531 Acknowledgement of Receipt of Addenda on the Bid Form. Failure to acknowledge receipt of any Addenda shall render the Bid non-responsive.

5. EXAMINATION OF SITE AND PLAN

A. The Bidders must satisfy themselves as to the location of the Work, transportation facilities, soil and rock conditions, underground conditions, groundwater, and all other matters which may influence their Bids. It will be assumed that the Bidder has investigated and is satisfied as to the conditions to be encountered, as to the character, quality and quantity of work to be performed and the material, equipment and other devices to be furnished and as to the requirements of these Contract Documents.

B. Any information derived from OID, the Engineer, or any of their employees or from any records of OID or the Engineer, will not relieve the Contractor from risks of the responsibility of fulfilling the terms of the Contract.

C. The Contractor shall review the site conditions before bidding.

D. **A mandatory pre-bid conference will be held at 9:00 a.m. on August 5, 2021, at the OID District Office** and will proceed to the site of the Work to review with prospective Bidders the conditions at the site and the Work to be performed under the Bid. Required safety gear includes hard hat, steel-toe boots, safety vest and eye protection.

6. FILLING IN BID FORMS BY BIDDERS

A. Bids shall be submitted on the Bid Form included with the Contract Documents. Bidder shall submit, concurrently with its Bid, all other information requested by these Contract Documents.

B. All blanks on the Bid Forms shall be filled in electronically or printed legibly in ink.

C. Interlineations, alterations, and erasures must all be individually initialed by the Bidder.

D. Bidder shall acknowledge receipt of all Addenda on the Bid.

E. Bidder shall not modify or qualify the Bid Form in any manner.

F. The Bid Form shall be signed by a person or persons legally authorized to bind Bidder to the Contract. The individuals signing each document shall warrant that they are authorized to bind the legal entity of the Bidder.

G. If any of the conditions describe Section 6 are not met, the bid will be deemed Non-Responsive and will be rejected.

7. BID GUARANTEE

A. Bids shall be accompanied by a cashier's or certified check payable to the order of the District delivered to office before 2:30 pm on Monday, September 13, 2021, amounting to ten percent (10%) of the Bid, or by a bond in said amount and payable to OID and signed by the Bidder and a corporate surety, or by the Bidder and two sureties who shall justify before any officer competent to administer an oath, in double the amount and over and above all statutory exemptions. In the event that the Bidder fails, within five (5) days after written notice that the Contract has been awarded to him, to enter into a Contract with OID, OID may award the Contract to the second lowest responsible Bidder. In such event, the amount of Bidder's security shall be applied by the District to the difference between the Bidder's Bid and the second lowest responsible Bid, and the surplus, if any, shall be returned to the Bidder if cash or a check is used, or to the surety on Bidder's bond if a bond is used.

B. The Bid security of the successful Bidder will be returned to him when he executes a satisfactory Contract accompanied by the proper bonds. The Bid security of other Bidders will be returned to them upon the award of the Contract to the successful Bidder, except that of the next higher Bidder which shall be returned to him upon the execution of a satisfactory Contract accompanied by the proper bonds by the lowest Bidder, or in case of his default, the surety of the next higher Bidder will be held until he executes a satisfactory Contract accompanied by the proper bonds.

8. WITHDRAWAL OF BID

A. Any Bid may be withdrawn at any time prior to 8:00 a.m. of the day fixed in the "Notice Inviting Sealed Bids" for the opening of the Bids provided that a request in writing executed by the Bidder or his authorized agent for such withdrawal is filed with the OID Representative. The withdrawal of any Bid shall not prejudice the right of a Bidder to file a new Bid prior to the established 2:30 p.m. deadline.

9. RESPONSIBILITY OF BIDDER

A. OID has absolute discretion to determine the lowest responsive, responsible Bidder. The Contract will not be awarded to any Bidder who cannot give satisfactory assurance of his ability to perform the Contract if it is awarded to him. Each Bidder may be required to furnish satisfactory evidence that he has sufficient means and facilities and has had ample experience in the type of work contemplated herein to

deliver the materials, furnish the equipment and devices, and complete the installation in accordance with the Contract Documents and within the time limit guaranteed.

B. In determining whether or not a Bidder, including the Bidder's principals and upper management, is "responsible," OID may consider the following factors in relation to the Work to be performed for this Project:

1. Demonstrated financial strength including, but not limited to, resources available, bonding capacity, and available insurance.

2. Demonstrated safety record including, but not limited to, Experience Modification Rate.

3. Successful completion of projects of similar scope and size. In reviewing this factor, OID may consider elements including, but not limited to, contract amount of completed projects, experience on public works projects, experience implementing prevailing wage certified payroll requirements, timeliness of performance, and, if necessary, evaluation of Bidder's work by previous cities, districts, clients, design professionals, or subcontractors.

4. Sufficiency of contract administration and construction management systems including, but not limited to, proposed scheduling tools, proposed subcontract forms, proposed progress payment applications, and proposed certification of payroll documents.

5. History of claims, litigation, and termination or disqualification from projects.

6. Bidder shall provide proof of public works Contractor registration with the California Department of Industrial Relations.

OID will make its determination of responsibility based upon information submitted by Bidders contained in the Contract Specifications Section 00550 Bidder's Responsibility Statement, and, if necessary, interviews with previous cities, districts, clients, design professionals, or subcontractors with whom the Bidder has worked.

If a Bidder otherwise determined to be the lowest responsive Bidder is determined to be non-responsible by the OID Representative, that Bidder will be given notice of each finding by the OID Representative and shall have five (5) working days to present additional relevant evidence to the OID representative. The OID Representative shall make a recommendation to the Board which shall make a finding on the issue of non-responsibility as part of the process of Award of Contract.

C. The Contractor shall possess a valid Class "A" Contractor's License at the time of bid, award of the Contract and throughout Project completion. Bids will not be accepted from a Contractor who is not licensed in accordance with the laws of the State of California.

D. Contractor shall register with the California Department of Industrial Relations (DIR) prior to submitting a bid for this Project, and shall be aware that this Project is subject to enforcement by DIR.

10. BID PROTEST

The lack of a prompt procedure to resolve disputes regarding the bidding process would impair the Owner's ability to carry out its purpose of constructing this project in a timely manner. Therefore, to the maximum extent authorized by law and notwithstanding any other procedures specified in documents referenced herein, all disputes and/or protests regarding the bidding process shall be subject to the following procedure. In submitting a Bid to the Owner for this project, the Bidder agrees to comply with and to be bound by this procedure.

Any Bid protest must be submitted in writing to Mr. Eric Thorburn (ethorburn@oakdaleirrigationdistrict.com), Water Operations Manager, copy to the Engineer (slewis@condorearth.com and ktarantino@condorearth.com), before 5:00 p.m. on the fifth (5th) working day following Bid opening.

A. The initial protest document shall contain a complete statement of the basis for the protest, and all supporting documentation.

B. The party filing the protest shall have actually submitted a Bid for the Work. A subcontractor of a party submitting a Bid for the Work may not submit a Bid protest. A party may not rely on the Bid protest submitted by another Bidder but shall pursue its own protest in a timely manner.

C. The protest shall refer to the specific portion of the Contract Document that forms the basis for the protest.

D. The protest must include the name, address, email address and telephone number of the person representing the protesting party.

E. The party filing the protest shall concurrently transmit a copy of the initial protest document and any attached documentation to all other parties with a direct financial interest that may be adversely affected by the outcome of the protest. Such parties shall include all other Bidders who appear to have a reasonable prospect of receiving an award depending upon the outcome of the protest.

F. The Owner will give the protested Bidder five (5) working days after the receipt of the protest to submit a written response. The responding Bidder shall transmit the response to the protesting Bidder concurrent with delivery to the Owner.

G. The procedure and time limits set forth in this paragraph are mandatory and are the Bidder's sole and exclusive remedy in the event of Bid protest. The Bidder's failure to comply with these procedures shall constitute a waiver of any right to further pursue the Bid protest, including filing a Government Code Claim or legal proceedings. A Bidder may not rely on a protest submitted by another Bidder but must timely pursue its own protest.

H. If the Owner determines that a protest is frivolous, the protesting Bidder may be determined to be non-responsible and that Bidder may be determined to be ineligible for future contract awards.

I. The Owner will issue a written final decision by first-class mail and/or by electronic means, such as facsimile or e-mail, within fifteen (15) working days of receiving the initial protest documentation from the protesting party. This written decision will state the Owner's determinations after an investigation of all protest documentation received/related information and the actions that will or will not be taken in response to the protest received from the protesting party.

11. PROGRESS SCHEDULES – MATERIAL AND EQUIPMENT LISTS

A. The Contractor will be required to submit Baseline and weekly Updated Schedules satisfactory to the Engineer showing the time and daily work hours he proposes to spend in prosecuting the various major divisions of the Work and his proposed sequence or order of operation in accordance with Contract General Requirements Section 01320 Progress and Schedules of these documents.

B. The Contractor will be required, subsequent to the award of the Contract, to submit a complete statement of the origin, composition and manufacturers of any or all materials to be used in the construction of the Work together with such samples thereof as the Engineer may direct.

C. The Contractor may be required to submit for the "review-and-acceptance" of the Engineer lists of all materials, equipment and/or devices contemplated to be used on or incorporated in the Work.

12. CONTRACT BONDS

A. The Contractor shall furnish bonds, at his own expense, to the extent required by law or as set forth in the Contract Documents and shall utilize the forms specified in the Contract Documents.

13. INSURANCE

A. The Contractor shall provide, at his own expense, all insurance including, but not limited to, Workers' Compensation, Automobile, Public Liability and Property Damage, all insurance required by law, and any additional insurance as stipulated within the Contract Documents, or by the Owner.

14. AWARD OF CONTRACT

A. The right is reserved to reject any or all Bids. The award of the Contract, if it is to be awarded, will be made to the lowest responsible Bidder whose Bid complied with all of the prescribed requirements.

15. EXECUTION OF CONTRACT

A. The Contract shall be executed and signed by the Contractor and returned with the prescribed executed bonds and proof of insurance as required by the Contract Documents within the ten (10) days after receipt by him of the Notice of Award. Failure to return the signed and executed Contract with the prescribed executed bonds and proof of insurance within the ten (10) day limit shall be just cause for the annulment of the award and the forfeiture of the Bid security.

16. SUBCONTRACTOR AND SUPPLIER

A. Each Bidder must comply with California PCC § 4100 to 4113 (Subletting and Subcontracting Fair Practices Act) and must submit with his Bid on the form attached to the Bid Form, the name and location of the mill, shop or office of each proposed Subcontractor and Supplier who will perform work or labor or render services to the Contractor in excess of one-half of one percent (0.5%) of the Contractor's total Price and shall state the portion of the work which will be done and/or by each Subcontractor.

B. Contractor is required to self-perform at least thirty three percent (33%) of all proposed work.

C. Contractor is required to provide a list of suppliers providing more than twenty thousand dollars ($20,000) in supplies/materials for the project Work to be performed under these Contract Documents.

17. COMMENCEMENT OF WORK

A. The site work shall be commenced within thirty (30) calendar days after receipt of "Notice-to-Proceed" (with access to canal no sooner than November 8, 2021) and must be substantially completed by February 19, 2022 and achieve Final Completion by March 31, 2022. The Construction Start Date shall be no later than November 8, 2021.

18. TAXES

A. The Bid price set forth in the Bid Form shall include all federal, state and local taxes applicable to the work or materials furnished and no claims for additional costs of any such tax shall be made.

19. SCHEDULE OF VALUES OR PRICES

A. The Contractor may be required or has the option to submit, upon award of Contract, a breakdown or schedule of lump sum and unit prices which is satisfactory to the Engineer to be used for monthly payment estimates.

20. GENERAL WAGE DETERMINATION

A. Pursuant to the State of California Labor Code 1770-1780, the rate of wages for each craft, classification or type of workman paid under this contract shall be at least that set by the wage scale as determined by the State of California, Director of Industrial Relations. Pursuant to State of California Labor Code 1773.2, a copy of these wage scale determinations is available at the Oakdale Irrigation District Office, for the Contractor's use. The Contractor shall determine the Employer Payments and Worker Classifications prior to start of work.

B. No contractor or subcontractor may be listed on a bid proposal for a public works project (submitted on or after March 1, 2015) unless registered with the Department of Industrial Relations pursuant to labor code section 1725.5. To register log on to the DIR website:
https://efiling.dir.ca.gov/PWCR/ActionServlet?action=displayPWCRegistrationForm

C. All contractors and subcontractors must furnish electronic certified payroll records directly to the Labor Commissioner (aka Division of Labor Standards Enforcement).

D. No contractor or subcontractor may be awarded a contract for public work on a public works project (awarded on or after April 1, 2015) unless registered with the department of industrial relations pursuant to labor code section 1725.5.

E. This project is subject to compliance monitoring and enforcement by the Department of Industrial Relations.

21. DISCREPANCIES IN BIDS

A. Where there is any discrepancy in the written or numerical quotation of unit Bids or the extension of the quantities and unit prices, the products of the written

quotation of unit price and the estimated quantity for the item will be the Bid considered correct by OID.

22. DELIVERY OF BIDS

A. Bids must be delivered to Owner up to but not later than the specified time as indicated in Contract Documents Section 00200 Notice Inviting Bids.

23. COMPLIANCE WITH BIDDING PROCESS

A. Owner reserves the right to accept or reject any submitted Bid which fails to comply with any of the requirements as set forth herein.

B. Owner reserves the right to waive minor, non-material deviations in submitted Bids, at Owner's sole discretion.

24. AWARD OF CONTRACT

A. The Owner may award a Contract as the interests of the Owner may dictate.

25. COMPLIANCE WITH PROGRESS SCHEDULE

A. The Contractor is specifically directed to review Contract Documents Section 01196 of the General Requirements.

B. The Work is extremely time-sensitive, and time is of the essence. It is critical that the Work be Substantially Completed by February 19, 2022 ("Substantial Completion Deadline"). Should the Contractor fail to complete the Work by the Substantial Completion Deadline, liquidated damages shall apply as per Contract Document Section 01013.

- END OF SECTION 00300 -

X:\Project\3000_prj\3818R OID Tunnel 8\Reports\Contract Docs_Specs\DIV 00\00300 Instructions for Bidders 20210721.docx

SECTION 00400

"NONCOLLUSION" AFFIDAVIT

State of California
County of _____

I,_____, being first duly sworn, deposes and says under penalty of perjury under the laws of the State of California, that he or she has the right, power, legal capacity, and authority to execute this Affidavit, as_____ of _____ the party making the foregoing Bid, that the Bid is not made in the interest of, or on behalf of, any undisclosed person, partnership, company, association, organization, or corporation; that the Bid is genuine and not collusive or sham; that the Bidder has not directly or indirectly induced or solicited any other Bidder to put in a false or sham Bid, and has not directly or indirectly colluded, conspired, connived, or agreed with any Bidder or anyone else to put in a sham Bid, or that anyone shall refrain from Bidding; that the Bidder has not in any manner, directly or indirectly, sought by agreement, communication, or conference with anyone to fix the Bid price of the Bidder or any other Bidder, or to fix any overhead, profit, or cost element of the Bid price, or of that of any other Bidder, or to secure any advantage against the public body awarding the contract of anyone interested in the proposed contract; that all statements contained in the Bid are true; and, further, that the Bidder has not, directly or indirectly, submitted his or her Bid price or any breakdown thereof, or the contents thereof, or divulged information or data relative thereto, or paid, and will not pay, any fee to any corporation, partnership, company association, organization, Bid depository, or to any member or agent thereof to effectuate a collusive or sham Bid.

IN WITNESS WHEREOF, the undersigned represent and, warrant that they have the right, power, legal capacity, and authority to sign this document on behalf of the Bidder, and have caused this document to be executed by setting thereto their names, titles and signatures at _____, _____ County, in the State of

_____.

BIDDER: _____
(Signature) (Date)

_____
(Name and Title of Signatories)

_____
(Legal Name Bidder)

_____
(Address)

_____
(Phone Number)

- END OF SECTION 00400 -

X:\Project\3000_prj\3818R OID Tunnel 8\Reports\Contract Docs_Specs\DIV 00\00400 Noncollusion 20210721.docx

SECTION 00502

INDEMNITY AGREEMENT

The undersigned Contractor (or supplier) by reason of contracts or purchase orders (and addenda and riders thereto) which have or may be entered into with the designate certificate holder, agrees the following conditions (which conform to California Civil Code, Section 2782) shall apply with respect to any and all work performed for or materials or equipment supplied to designated certificate holder.

The Contractor agrees to indemnify and hold harmless, the Owner, Condor Earth, their officers, directors, agents, employees, and consultants from and against all loss or expense, (including costs and attorney fees) on account of injury or death of persons employed by the Contractor, or his subcontractors, his or their agents or employees; injury to or death of any person; or injury to, damage or destruction of property, real or personal, including loss of use thereof. Upon demand, the Contractor shall defend any suits or actions covered by the terms of this Agreement.

Before commencing work, Contractor shall obtain at his own expense, and agrees to keep in effect during the life of this Contract, as a minimum requirement, the following insurance, and any additional insurance as stipulated within the Contract Documents (including Contract Specification Section 01172), in a company or companies acceptable to the Owner. All insurance, excepting Workers' Compensation and Occupational Disease Insurance, shall include as additional insured: the Owner, Condor Earth, and their officers, employees, consultants and agents.

A. Worker's Compensation and Occupational Disease Insurance meeting the statutory requirements of the State in which the work is to be performed; and Employer's Liability Insurance in an amount of at least **$1,000,000.00**.

B. Comprehensive Liability Insurance with limits of:

   1. Bodily Injury, Property Damage and Personal Injury - **$1,000,000.00** each occurrence, **$2,000,000.00** aggregate.

   2. This insurance shall be on an occurrence basis and shall protect the Contractor against liability arising from: his operations, operations by sub-contractors, elevators, products, completed operations and contractual liability assumed under the indemnity provisions above insurance.

C. Automobile Liability on occurrence basis covering all owned, non-owned, and hired automobiles for limits of liability of:

   1. Bodily Injury and Property Damage - **$1,000,000.00** each occurrence.

D. Builder's Risk Insurance is not required, but any damages due to fire, arson, vandalism or other causes typically covered under Builder's Risk Insurance during the construction period will be the full responsibility of the Contractor.

Provided however, that the limits of such insurance shall not limit the extent of such assumed responsibility and liability.

DATE: _____ ACCEPTED: _____
Owner, Partner or Officer

Witness-If Corp., Attest & Seal COMPANY: _____

- END OF SECTION 00502 -

X:\Project\3000_prj\3818R OID Tunnel 8\Reports\Contract Docs_Specs\DIV 00\00502 Indemnity 20210721.docx

SECTION 00503

GUARANTY

The Contractor shall remain responsible for all defects in the Work, for a period of one (1) year following completion and acceptance of the Work by the Owner. Should any of the materials or equipment prove defective or should the Work as a whole prove defective, due to faulty techniques, material furnished or methods of installation, or should the Work or any part thereof fail to operate properly as originally intended and in accordance with the Plans and Specifications, the undersigned agrees to reimburse the Owner upon demand, for its expenses incurred in restoring said Work to the condition contemplated in said project, including the cost of any such equipment or materials replaced and the cost of removing and replacing any other work necessary to make such replacement or repairs, or, upon demand by the Owner, to replace any such materials and to repair said work completely without cost to the Owner so that said work will function successfully as originally contemplated.

The Owner shall have the unqualified option to make any needed replacement or repairs itself or to have such replacements or repairs done by the undersigned. In the event the Owner elects to have said work performed by the undersigned, the undersigned agrees that the repairs shall be made and such materials as are necessary shall be furnished and installed within a reasonable time after receipt of demand from the Owner. If the undersigned shall fail or refuse to comply with his obligations under this guaranty, the Owner shall be entitled to all costs and expenses, including attorney's fees, reasonably incurred by reason of the said failure or refusal.

Full compensation for furnishing the guaranty will be considered as included in the contract price or prices paid for the items of work involved and no additional compensation will be allowed therefore.

Date: _____ _____

Contractor

- END OF SECTION 00503 -

X:\Project\3000_prj\3818R OID Tunnel 8\Reports\Contract Docs_Specs\DIV 00\00503 Guaranty 20210721.docx

SECTION 00520

CONTRACT

This CONTRACT is made and entered into this _____ day of_____, 2021, by and between the Oakdale Irrigation District (hereinafter "Owner") whose address is 1205 East F Street, Oakdale, CA 95361, and _____ (hereinafter "Contractor") whose U.S. postal address is _____ _____.

W I T N E S S E T H

That the Owner has awarded to the Contractor, upon Contractor Bid duly submitted, the Contract for doing the Work and furnishing the materials and equipment for the Work described in the Contract Documents bound herewith on the terms stated as follows:

1. Contractor Agrees:

   A. To do the Work and furnish the labor, material, equipment and appliances to complete the Work in accordance with the Contract Documents.

   B. To do and perform the Work diligently as directed by the Owner until completion is evidenced by written acceptance by the Owner.

   C. To start said site work within thirty (30) calendar days after receipt of Notice-to-Proceed (with access to canal no sooner than November 8, 2021) and to complete the Work on or before February 19, 2022.

   D. To remedy, at Contractor's expense, any defects in the work which shall appear within a period of twelve (12) months from the date of the final acceptance of the Work.

   E. To do and perform the Work contemplated hereby and furnish labor, material, appliances, equipment, tools and pay all taxes therefore, at the bid price specified in the Bid form submitted by the Contractor, a conformed copy of which is attached to and made a part of the Contract.

   F. To assume sole and complete responsibility for site conditions during the course of construction of this project, including safety of all persons and property; and that this requirement shall apply continuously and not be limited to normal working hours.

G. To maintain during the life of this Contract at the Contractors own expense Workers' Compensation, Automobile, Comprehensive Liability and Property Damage Insurance as set forth in any of the Contract Documents including, but not limited to Section 00502 Indemnity Agreement and in General Requirements Section 01172 Contractor's Insurance, or any additional insurance that may be required by the Owner for the Work. Certificates of such insurance shall be delivered to the Owner prior to the start of Work, and as may be otherwise specified within the Contract Documents. The Contractor must comply with California Labor Code §3700. All insurance, excepting Worker's Compensation and Occupational Disease Insurance, shall include as additional insured, the Oakdale Irrigation District, Condor Earth and the directors, officers, employees, consultants and agents of the aforementioned. The Contractor shall furnish evidence of the required insurance coverage to the Owner prior to execution of the Contract Documents. And in compliance with provisions of Section 1861 of the California Labor Code, the undersigned Contractor certifies as follows:

> I am aware of the provisions of Section 3700 of the California Labor Code, which requires every employer to be insured against liability for Workers' Compensation or to undertake self-insurance in accordance with the provisions of that Code, and I will comply with such provisions before commencing the performance of the work on this Contract.

H. Should the Contractor fail to complete the Work included in the Contract within the time limit agreed upon or such extensions thereof as may be granted, a deduction of **FIVE THOUSAND DOLLARS ($5,000) per day** will be made from amounts otherwise due to the Contractor for each and every calendar day, or fraction thereof, that the Work, or each stated portion, remains incomplete after the Substantial Completion Date.

2. The Owner will cause payment to be made to the Contractor for the Contract prices provided herein in the following manner:

A. Contractor shall submit draft payment request within 10 days following the end of preceding work period to the Engineer for review and acceptance. Upon acceptance of draft payment request by Engineer, the Contractor shall submit approved payment request with certified payroll and eCPR backup documentation for review and approval by the Engineer. The Engineer will review the submittal for payment request with certified payroll and eCPR documentation for accuracy and correctness and will submit approved pay request to the Owner for payment. Should the Engineer find errors in the backup documentation, the Engineer will respond to the Contractor within 5 work days requesting correction. If corrections are required by the Contractor, it is the Contractor's responsibility to re-submit corrected documentation for further review by Engineer. The Engineer shall review pay submittals and resubmittals within 5 work days. Corrections shall be required prior

to Notice-of-Completion. Each approved payment request submitted will be paid an amount equal to ninety-five percent (95%) of the value of all work completed, based on the quantities of work approved by the Engineer at the unit prices stated at the time of Bid, less the aggregate of all previous payments made to the Contractor. Owner will issue payment within 30 days upon the Engineer's submittal of the Contractor's approved submitted payment request.

B. Before issuance of the Notice-of-Completion, the Contractor shall submit evidence satisfactory to the Owner that all payrolls, materials bills and other indebtedness connected with the Work have been paid, except that in the case of disputed indebtedness or liens, the Contractor may submit in lieu of evidence of payment, a Surety Bond satisfactory to the Owner guaranteeing payment of all such disputed amounts when adjudicated.

C. Upon receipt of written notice that the Work is ready for final review, the Engineer and Owner will promptly make such review, and when the Owner finds the Work satisfactory under the Contract and the Contract fully performed, the Owner will promptly issue a Final Notice stating that the Work required by this Contract has been completed. The Owner then shall issue to the Contractor, the entire balance found to be due within **thirty-five (35) days** after the date of the Owner's Final Notice.

D. Contractor may substitute securities in lieu of retained funds in accordance with California PCC § 22300.

3. It is further agreed by the parties that before each payment is made as provided above, receipts and releases of liens of all kinds for all labor and materials and all other indebtedness connected with the Work shall be presented to the Owner by the Contractor, unless specified otherwise by the Owner.

4. It is expressly understood and agreed that a waiver of any of the conditions or covenants of this Contract shall not be considered a waiver of any of the provisions hereof.

5. Contractor agrees to submit for review and approval DAS forms 140 and 142 (including Subcontractors) based on the State of California, Director of Industrial Relations time requirements.

6. Contractor (including Subcontractor) agrees to pay to each craft, classification or type of workman the prevailing wage determined by the State of California, Director of Industrial Relations, in the published wage scale determination, which the Contractor will post at the project site. Contractor agrees to comply with California Labor Code §§ 1777.5, 1776. Certified payroll documentation shall be submitted with all Contractor pay requests for review and acceptance by the Engineer as described in Section 2.A above. The Engineer will use the following check list for certified payroll review:

- Certified Payroll (CPR) and DIR eCPRs (including DIR Confirmation page) must be submitted for each payroll.

- Fringe Benefit Statement must be included with the first payroll and for any changes.
- Provide a copy and proof of submission of the DAS 140 prior to starting work on the Project.
- Provide a copy and proof of submission of the DAS 142 as work progresses.
- If no work is performed, a Statement of Non-Performance (SNP) and DIR eCPR SNP must be provided for the payroll.
- Certified Payroll, DIR eCPRs (including DIR Confirmation page), and Statement of Non-Performances must be numbered in sequence with no gaps in payroll periods.
- Provide a Statement of Compliance for each payroll.
- Certified Payrolls/eCPRs must contain the Craft/Classification as listed by the DIR
- Proof of training funds paid will be required.

7. If the Contractor should be adjudged as bankrupt, or if the Contractor should make a general assignment for the benefit of Contractor's creditors, or if a receiver should be appointed on account of Contractor's insolvency, or if Contractor or any of Contractor's Subcontractors should persistently violate any of the provisions of the contract, or if Contractor should persistently or repeatedly refuse or should fail, except in cases for which extension of time is provided, to supply enough properly skilled workmen or proper materials, or if Contractor should fail to make prompt payment to Subcontractors or for material or labor, or persistently disregard laws, ordinances or the instructions of the Engineer, then the Owner may, upon certificate of the Engineer when sufficient cause exists to justify such action, serve written notice upon the Contractor and Contractor's surety of its intention to terminate the Contract, such notice to contain the reasons for such intention to terminate the Contract, and unless within five (5) days after the serving of such notice, such violations shall cease and satisfactory arrangements for correction thereof be made, the Contract shall, upon the expiration of said five (5) days, cease and terminate. In the event of any such termination, the Owner shall immediately serve written notice thereof upon the surety and the Contractor, and the surety shall have the right to take over and perform the Contract, provided, however, that if the surety within ten (10) days after the serving upon it of Notice-of-Termination does not give the Owner written notice of its intention to take over and perform the Contract or does not commence performance thereof within the ten (10) days stated above from the date of the serving of such notice, the Owner may take over the work and prosecute the same to completion by Contract or by any other method it may deem advisable, for the account and at the expense of the Contractor, and the Contractor and Contractor's surety shall be liable to the Owner for any excess cost occasioned the Owner thereby, and in such event the Owner may without liability for doing so, take possession of and utilize in completing the work such materials, appliances, plant and other property belonging to the Contractor as may be on the site of the work and necessary therefore. In such case the Contractor shall not be entitled to receive any further payment until the Work is finished. If the unpaid balance of the contract price shall exceed the expenses of finishing the Work, including compensation for additional managerial and administrative services, such excess shall be paid to the Contractor. If the expense shall exceed such unpaid balance, the Contractor shall pay the difference to the Owner. The

expense incurred by the Owner, as herein provided and damage incurred through the Contractor's default, shall be certified by the Engineer.

8. New and unforeseen work will be classed as Extra Work when determined by the Owner that such work is not covered by any of the various items or combination of such items for which there is a Bid Price. In the event that portions of such Work are determined by the Owner to be covered by some of the various items or combinations of such items for which there is a Bid Price, the remaining portion of such Work will be classified as Extra Work. Extra Work also includes work specifically designated as extra work in the Plans and Specifications. Extra Work when ordered and accepted shall be paid for under a written Change Order in accordance with the terms therein provided. Payment for the Extra Work will be made at the unit price agreed upon by the Contractor and the Owner; or by force account. If the Work is done on force account, the Contractor shall receive the actual cost of all materials furnished by Contractor as shown by Contractor's paid voucher, plus fifteen percent (15%), and for all labor, equipment and tools that are necessary, Contractor shall receive the current prices in the locality, which shall have been previously determined and agreed to in writing. The price paid for labor shall include any compensation insurance paid by the Contractor. Mark up on Subcontractors work shall not exceed fifteen percent (15%). All Extra Work and force account shall be adjusted daily upon report sheets, prepared by the Contractor, approved and signed by the Engineer, and furnished to the Owner, which daily reports shall thereafter be considered the true record of extra or force account work done.

9. It is mutually agreed and understood that the complete Contract shall consist of this Contract, and the following component documents, all of which are fully a part hereof as if herein set out in full, or if not attached, as if attached, and which together constitute the Contract Documents:

   A. *South Main Canal and Tunnel Improvements – Tunnel 8 Contract Drawings dated July 21, 2021;*

   B. *Accepted Bid;*

   C. *Any Published Addenda or Supplements.*

10. The provisions of California Labor Code § 1777.5 and 1777.6 shall apply to the employment of apprentices by Contractor or any Subcontractor under Contractor.

11. If the total bid amount as set forth in the Bid is in excess of $25,000, then Contractor shall provide a faithful Performance Bond and Payment Bond each in the sum of one hundred percent (100%) of the Contract Price; the Faithful Performance Bond will be retained by Owner for twelve (12) months following final acceptance by Owner of the improvements constructed to guarantee correction of failures attributable to workmanship and materials for a period of one year from final acceptance. Upon final acceptance by Owner, the amount of the Faithful Performance Bond will be reduced to twenty percent (20%) of the actual improvement construction costs.

12. All provisions of the California Occupational Safety and Health Act of 1973 (Cal OSHA), as amended, shall be the responsibility of the Contractor to adhere to.

13. The statutory provisions for penalties for failing to comply with the State of California wage and labor laws will be enforced, as well as that for failing to pay prevailing wages.

14. Owner shall, within ten (10) days of receipt by Owner of any third-party claim relating to this Contract, notify Contractor in writing of the receipt of such claim.

15. Eight (8) hours labor constitutes a legal day's work.

16. The Contractor shall guarantee the work for a period of one (1) year after the date of filing of the Notice-of-Completion. The faulty materials and/or workmanship, and any repairs made necessary by these causes shall be at Contractor's expense. A written manufacturer's warranty shall be provided for equipment supplied under this contract. The warranty shall cover all defects or failures of materials, or workmanship that occurs as the result of normal operation and service.

17. The Contractor shall indemnify, defend, and hold harmless the Owner, Condor Earth, the State of California and the directors, officers, agents, and employees of the aforementioned, and as outlined in Contract Specification Section 00502 "Indemnity Agreement," from any and all claims and losses accruing or resulting to Contractor and to any and all Subcontractors, materials, men, laborers, and any other person, firm, or corporation furnishing or supplying work, services, materials, or supplies in connection with the performance of this agreement, and from any and all claims and losses accruing or resulting to any person, firm, or corporation who may be injured or damaged by the Contractor in the performance of this agreement. To the extent required by applicable law, disputes arising between the Contractor and the Owner under or in connection with this Contract shall be resolved in accordance with the provisions of Public Contract Code, Section 20104, incorporated herein by this reference only after provisions for Dispute Resolution have been thoroughly exhausted.

18. Contractor and Owner shall attempt to resolve conflicts or disputes under this Contact in a fair and reasonable manner and agree that if resolution cannot be made an attempt will be made to mediate the conflict by a professional mediator (except for payment disputes which may be submitted directly to arbitration). If mediation does not settle any dispute or action which arises under this Contract or the subject matter of this Contract, it shall be subject to arbitration under the rules governing commercial arbitration as promulgated by the American Arbitration Association. All arbitration shall be subject to the Federal Arbitration Act.

19. Per Government Code Section 4552 in submitting its Bid and entering into the Contract or a Subcontract to supply goods, services, or materials pursuant to the Contract, the Contractor or Subcontractor offers and agrees to assign to the Owner all rights, title, and interest in and to all causes of action it may have under Section 4 of the Clayton Act (15

U.S.C. Sec. 15) or under the Cartwright Act (Chapter 2 (commencing with Section 16700) of Part 2 of Division 7 of the Business and Professions Code), arising from purchases of goods, services, or materials pursuant to the Contract or any Subcontract. This assignment shall be made and become effective at the time the Owner tenders final payment to the Contractor, without further acknowledgment by the parties.

20. The Contractor shall not assign or transfer this Contract or any part thereof or any interest therein without consent in writing of the Owner and the Contractor's Surety, and any such assignment or transfer without such written consent shall be null and void.

IN WITNESS WHEREOF, the parties hereto have caused these presents to be executed in duplicate, on the day and year first above written.

OAKDALE IRRIGATION DISTRICT Oakdale, California	CONTRACTOR _____
BY: _____	BY: _____
TITLE: _____	TITLE: _____

- END OF SECTION 00520 -

X:\Project\3000_prj\3818R OID Tunnel 8\Reports\Contract Docs_Specs\DIV 00\00520 Contract 20210721.docx

SECTION 00530

BID

Bid Opening: 2:30 p.m.
on Friday, September 13, 2021
Via Email to: ethorburn@oakdaleirrigation.com

In response to your call for bids, the undersigned (also referred to as "Bidder") having examined the site of the Work, the Contract Documents, Contract Drawings, and documents attached thereto, or other documents that are otherwise implied, hereby proposes to furnish the labor, all equipment, all materials, all devices and other costs including federal, state, county and local sales or other taxes, to do the work for which prices are quoted below, and to complete all work ready for use in within the number of working days specified and in accordance with said Contract Documents.

In the following Bid, amounts shall be shown in figures for the bid items. The total base Bid Price shall be shown in both words and figures. In case of discrepancy between the words and figures, the words will govern.

Unit Quantities

The Owner reserves the right to adjust unit quantities to greater or lesser than twenty-five percent (25%) of the estimated quantities without change to the Contractor's Bid Unit Price.

Mobilization/Demobilization Costs

Mobilization and demobilization shall be paid as a percentage complete of the Contract lump sum (LS) price. The mobilization bid amount shall not exceed fifteen percent (15%) of the total bid amount. The demobilization bid amount shall be equal to or greater than twenty-five percent (25%) of the mobilization bid amount.

OAKDALE IRRIGATION DISTRICT
South Main Canal and Tunnels Improvements
Tunnel 8 Rehabilitation
Schedule of Baseline Bid Prices

Bid Item	Bid Item Description	Estimated Quantity	Unit	Unit Price	Unit Price Extension
1. Mobilization and Demobilization					
1A	Site Mobilization	1	LS	$	$
1B	Site Demobilization	1	LS	$	$
1.	**Subtotal Mobilization and Demobilization**				**$**
1C	Optional Staging Area Rental Allowance (Hunter Only; Note 1)		Mos	$1,500	$

2. Stormwater Management					
2A	SWPPP, EPS, facilities, equipment, materials, operation, etc.	1	LS		$
2B	Tunnel De-watering	1	LS		$
2	**Subtotal Stormwater Management**				**$**

3. Upstream and Downstream Portal Improvements					
3A	Portal Shotcrete Overlay	800	SF		$
3	**Subtotal Upstream and Downstream Portal Improvements**				**$**

4. Tunnel Improvements					
4A	Tunnel Excavation/Re-shaping	1	LS		$
4B	Tunnel Invert Grading, Preparation and Backfill	1	LS		$
4C	4-inch Thick Shotcrete Tunnel Liner (FRS)	610	LF		$
4D	6-inch Thick Concrete Tunnel Invert Slab	7,203	SF		$
4	**Subtotal Tunnel Improvements**				**$**

5. Miscellaneous					
5A	Off-Site Disposal of Earth (tunnel excavation spoils)	820	CY		$
5B	Backfill Shotcrete (if needed)	15	CY		$
5C	Temporary/Additional Support (toolbox items, if needed)				
5C1	Wire Mesh and Friction Anchors	500	SF		$
5C2	Rock Dowels – Cement Grouted	20	EA		$
5C3	Rock Dowels – Epoxy Resin	20	EA		$
5	**Subtotal Miscellaneous**				**$**

Notes:
1. Contractor shall provide duration and extend unit price of Item 1C if the Contractor chooses to use the Hunter Staging Area. Do not include this item in the Total Base Bid Price.
2. LS – Lump sum
3. EA – Each
4. Mos – Months
5. CY – Cubic yard
6. LF – Lineal foot
7. SF – Square foot

Subtotal – Items 1 through 5		
1	**Mobilization and Demobilization**	**$**
2	**Stormwater Management**	**$**
3	**Upstream and Downstream Portal Improvements**	**$**
4	**Tunnel Improvements**	**$**
5	**Miscellaneous**	**$**
Total Base Bid Price (in words) _____ _____ **Dollars**		**$**

Attached hereto and made a part hereof is United States Currency, Cashier's Check, Certified Check or Surety Bond No. _____ in the amount of $_____ which is not less than ten percent (10%) of the total amount of the total Bid, as a guaranty that the Bidder will enter into a Contract in the form bound with these Contract Documents within five (5) days after the Notice-of-Award of the Contract by the Owner.

The undersigned hereby agrees that, in case his Bid is accepted, he will within five (5) days after notice thereof, execute a Contract with the Owner in the form hereto attached and, if required by law, shall furnish a bond in the sum of the Contract price to secure the payment of all labor and material bills, and also a bond in the sum of the Contract price to secure the faithful performance of the Contract according to the terms and provisions therein; and in case of failure to execute the Contract and furnish the bonds within said period or such extension thereof as may be allowed by resolution duly passed and adopted, it is expressly agreed that the District may award the Contract to the second lowest Bidder and the amount of Bidder's security shall be forfeited to the District.

It is understood by the undersigned that the quantities of material of work specified in the "Notice Inviting Sealed Bids" are estimated and are given only for the purpose of comparing Bids and that the prices quoted are not conditioned upon the accuracy or approximate accuracy of the estimate.

It is understood that the Owner may award a Contract as the interests of the Owner may dictate.

Attached hereto and made a part of this Bid is a list of Subcontractors as required by the provisions of Sections 4100 to 4113 of the Government Code of the State of California.

CONTRACTOR: _____

BY: _____

TITLE: _____

ADDRESS: _____

_____

CONTRACTOR'S LICENSE NUMBER: _____

DIR REGISTRATION NUMBER: _____

TELEPHONE NUMBER: _____

- END OF SECTION 00530 -

X:\Project\3000_prj\3818R OID Tunnel 8\Reports\Contract Docs_Specs\DIV 00\00530 Bid 20210721.docx

SECTION 00531

ACKNOWLEDGEMENT OF RECEIPT OF ADDENDA

Please indicate receipt of any Addenda to the Contract Documents by filling in the appropriate Addendum number and filling in date received below. If there are any questions on any Addenda that may have been issued, please contact Scott W. Lewis, Project Manager, Condor Earth, 21663 Brian Lane, Sonora, California, 95370, telephone 209.536.7370, electronic mail slewis@condorearth.com copy to Kim Tarantino electronic mail ktarantino@condorearth.com.

Addendum No. _____ Date Received _____

Addendum No. _____ Date Received _____

Addendum No. _____ Date Received _____

Addendum No. _____ Date Received _____

Addendum No. _____ Date Received _____

A BID MAY BE RENDERED NON-RESPONSIVE IF THE BIDDER DOES NOT ACKNOWLEDGE THE RECEIPT OF ALL ADDENDA WHICH MAY HAVE BEEN ISSUED FOR THIS CONTRACT.

_____
Bidder's Names

_____
Name and Title of Signer

_____
Bidder's Street Address

_____
Bidder's City, State, ZIP

_____
Bidder's Telephone No.

_____ _____
Signature of Bidder of Authorized Representative Date

- END OF SECTION 00531 -

X:\Project\3000_prj\3818R OID Tunnel 8\Reports\Contract Docs_Specs\DIV 00\00531 Ack Rcp of Addenda 20210721.docx

SECTION 00540

LIST OF SUBCONTRACTORS AND SUPPLIERS

In compliance with the provisions of California PCC §4100 to 4113, and any amendments thereof, each Bidder shall set forth below the names and locations of the mill, shop or office of each Subcontractor who will perform work or labor or render service to the Contractor, in an amount in excess of one-half of one percent (0.5%) of the Contractor's total Price on or about the construction of the Work or improvement to be performed under these Contract Documents and the portion of the Work which will be done by each Subcontractor. Contractor is required to self-perform at least thirty three percent (33%) of all proposed Work.

Additionally, the Contractor is required to provide a list of suppliers providing more than $20,000 in supplies/materials for the project Work to be performed under these Contract Documents.

If the Contractor fails to specify a Subcontractor and/or Supplier for any portion of the Work to be performed under the Contract, he shall be deemed to have agreed to perform such portion himself, and he shall not be permitted to subcontract or purchase order that portion of the Work except under the conditions herein set forth.

Subletting, subcontracting or purchase ordering of any portion of the Work as to which no Subcontractor and Supplier was designated in the original Bid shall only be permitted in cases of public emergency. If the Contractor fails to list Subcontractors or Suppliers as required by code or as described in this Section, the bid will be considered Non-Responsive.

Portion of Work	Name Sub/Supplier	Business Address	License #	% Work	DIR #

Portion of Work	Name Sub/Supplier	Business Address	License #	% Work	DIR #

FIRM NAME: _____

BY: _____

TITLE: _____

- END OF SECTION 00540 -

X:\Project\3000_prj\3818R OID Tunnel 8\Reports\Contract Docs_Specs\DIV 00\00540 List of Subs 20210721.docx

SECTION 00550

BIDDER'S RESPONSIBILITY STATEMENT

1. SCOPE OF THIS STATEMENT

In order to allow the Oakdale Irrigation District (OID) to make a determination of the Bidder's responsibility, the Bidder shall provide the following information as a part of its Bid. OID shall use the information contained in this Statement for the sole purpose of determining the Bidder's responsibility. If additional pages are required to respond to any of the questions set forth in this Statement, the Bidder shall describe and list the additional pages in Section 8 below.

2. EXPERIENCE

a. How many years has the Bidder been performing work as a contractor under the present business name?

_____

b. Does any of the Bidder's experience listed in this document refer to work performed under a different business name? If so, list the different business names and describe the relationship to the present business name on a separate page (list the additional pages in Section 8 below).

_____

c. Does any of the Bidder's experience listed in this document refer to work performed by a current employee(s) while employed under a different business name? If so, list (1) the different business name(s), (2) the employee(s) role in the work experience, (3) the employee(s) role under the present business name, and (4) the associated work experience project name listed in this document on a separate page (list the additional pages in Section 8 below).

_____

d. Does any of the Bidder's experience listed in Section 8 of this document refer to work performed by a subcontractor to the Bidder? If so, list (1) the subcontractor business name, (2) the subcontractor's role in the work experience, and (3) the associated work experience project name listed in this document on a separate page (list the additional pages in Section 8 below).

_____

3. CURRENT WORK IN PROGRESS

a. How many construction projects, which are currently under construction, is the Bidder under contract to perform?

_____

b. What is the total dollar amount of the construction contracts listed in Section 3.a. above?

_____

c. How many construction contracts listed in Section 3.a. are:

(i). In an amount of $500,000 or less?

_____

(ii). In an amount between $500,001 and $1,000,000?

_____

(iii). In an amount between $1,000,001 and $3,000,000?

_____

(iv). In an amount over $3,000,000?

_____

(v). List the name of the project and a client contact person, with telephone number, for three current active projects referred to in Section 3.c above.

Project Name: _____

Contract Amount: _____

Client Contact: _____

Name and Phone: _____

Email: _____

Project Name: _____

Contract Amount: _____

Client Contact: _____

Name and Phone: _____

Email: _____

Project Name: _____

Contract Amount: _____

Client Contact: _____

Name and Phone: _____

Email: _____

4. COMPLETED WORK

Provide the requested information set forth below for the: (a) three most recent projects completed with a cost above $2,000,000 (do not list any projects listed in 3.c.(v) above); (b) three most recent tunnel rehabilitation or new construction projects completed with a cost above $500,000 (do not list any projects listed in 3.c.(v) above).

a. Three most recent projects completed above $2,000,000:

Project Name: _____

Project Description: _____

_____

_____

_____

Contract Amount: _____

Date Completed: _____

Contact Person: _____

Contact Person's Phone: _____

Email: _____

Project Name: _____

Project Description: _____

_____

_____

_____

Contract Amount: _____

Date Completed: _____

Contact Person: _____

Contact Person's Phone: _____

Email: _____

Project Name: _____

Project Description: _____

_____

_____

_____

Contract Amount: _____

Date Completed: _____

Contact Person: _____

Contact Person's Phone: _____

Email: _____

b. Three most recent tunnel rehabilitation or new construction projects completed above $500,000 (may use completed projects above):

Project Name: _____

Length of Tunnel Rehabilitation or Construction: _____

Project Description: _____

_____

_____

_____

Contract Amount: _____

Date Completed: _____

Contact Person: _____

Contact Person's Phone: _____

Email: _____

Project Name: _____

Length of Tunnel Rehabilitation or Construction: _____

Project Description: _____

_____

_____

_____

Contract Amount: _____

Date Completed: _____

Contact Person: _____

Contact Person's Phone: _____

Email: _____

Project Name: _____

Length of Tunnel Rehabilitation or Construction: _____

Project Description: _____

_____

_____

_____

Contract Amount: _____

Date Completed: _____

Contact Person: _____

Contact Person's Phone: _____

Contact Person's Phone: _____

Email: _____

5. CLAIMS HISTORY

a. Has any claim (whether mediated, arbitrated, or litigated) been made against your company or any subcontractor listed in Section 8 in the past five (5) years?

_____

b. Has your company or any subcontractor listed in Section 8 made any claim (whether mediated, arbitrated, or litigated) against any public entity or claim in the past five (5) years?

_____

c. If you answered "yes" to subsections 5.a. or 5.b. above, describe the claim(s) using the format below: (use additional sheets if necessary).

Project Name: _____

Claim Amount: _____

Other Party Contact: _____

Name and Phone: _____

Explanation: _____

_____

_____

_____

If more than one (1), describe on additional sheet (see Section 8 below).

6. CONTRACT TERMINATION

a. Has your company or any subcontractor listed in Section 8 ever been terminated by a public entity or client, or rejected from bidding on a public works project in the last five (5) years?

_____. If yes, provide an explanation below:

Project Name: _____

Public Entity/Client Contact

Name and Phone: _____

Date of Termination/Rejection: _____

Explanation: _____

_____

_____

_____

If more than one (1), describe on additional sheet (see Section 8 below).

7. COMPLETION BY SURETY

a. Has your company ever failed to satisfactorily complete a construction contract, or has a surety ever completed any portion of a construction contract of your company within the last five (5) years?

_____. If yes, provide an explanation below:

Project Name: _____

Surety Contact
Name and Phone: _____

Date of Surety Took Over: _____

Explanation: _____

_____

_____

_____

If more than one (1), describe on additional sheet (see Section 8, below).

8. ADDITIONAL PAGES

The Bidder is **required** to provide and declares that the pages listed in this Subsection were added and included with these Bid Documents in order to accurately respond to the Bidding Requirements, including but not limited to items listed in Section 00300 – Instructions for Bidders, Items 9, 11 and 16 – Responsibility of Bidder, Schedule and Subcontractor Participation. Failure to submit these items with the Bid may be used by the Owner to find the bid Non-Responsive per Section 00300.6.G.

(Describe and List Pages Attached) _____

_____

_____

_____

_____

_____

_____

_____

_____

_____

9. PENALTY OF PERJURY

Bidder hereby declares and certifies under penalty of perjury that the information contained herein is true, correct, and complete.

10. Bidder shall provide proof of public works Contractor registration with the California Department of Industrial Relations (use additional sheets if necessary).

_____ (List Pages)

IN WITNESS WHEREOF, the undersigned represent and warrant that they have the right, power, legal capacity and authority to sign this document on behalf of the Bidder and have caused this document to be executed by setting hereto their names, titles and signatures.

BIDDER: _____ DATE: _____
(Signature)

_____
(Name and Title of Signatories)

_____
(Legal Name of Bidder)

_____
(Address)

_____
(Phone Number)

- END OF SECTION 00550 -

X:\Project\3000_prj\3818R OID Tunnel 8\Reports\Contract Docs_Specs\DIV 00\00550 Bidders Responsibility 20210721.docx

ATTACH CONTRACTOR SUBMITTED ADDITIONAL PAGES HERE

SECTION 00600

BOND REQUIREMENTS

PART 1 - GENERAL

1.01 GENERAL

A. All bonds required, whether Bid bonds, Performance, Payment, or other bonds, shall be issued by an admitted surety insurer. The same admitted surety insurer must issue the Bid Bond, Performance Bond, and Payment Bond. The Payment and Performance Bonds required by these Specifications will neither be accepted nor approved by the Owner unless the bonds are underwritten by an admitted surety and the requirements of California Code of Civil Procedure Section 995.630 are met. The Owner further reserves the right to satisfy itself as to the acceptability of the surety and the form of bond. **Upon request of the Owner, the bidder shall submit the following documents:**

1. The original, or a certified copy, of the unrevoked appointment, power of attorney, bylaws, or other instrument authorizing the person who executed the bond to do so.

2. A certified copy of the certificate of authority of the insurer issued by the California Insurance Commissioner.

3. A certificate from the county clerk that the certificate of authority has not been surrendered, revoked, canceled, annulled, or suspended, or in the event that it has, that renewed authority has been granted.

4. A certified copy of the certificate of the listing status from the United States Department of the Treasury Circular Number 570, as amended.

5. A financial statement of the assets and liabilities of the insurer to the end of the quarter calendar year prior to thirty (30) days next preceding the date of the execution of the bond, in the form of an officers' certificate as defined in Corporations Code 173.

B. Such Bonds shall be executed by the Contractor and a corporate bonding company licensed to transact such business in the state in which the work is to be performed and named on the current list of "Surety Companies Acceptable on Federal Bonds" as published in the Treasury Department Circular Number 570. The expense of these Bonds shall be borne by the Contractor. If at any time a Surety on any such Bond is declared a bankrupt or loses its right to do business in the state in which the Work is to be performed or is removed from the list of

surety companies accepted on Federal Bonds, Contractor shall within twenty (20) days after notice from the Owner to do so, substitute an acceptable Bond (or Bonds) in such form and sum and signed by such other Surety or Sureties as may be satisfactory to the Owner. The premiums on such Bond shall be paid by the Contractor. No further payment shall be deemed due nor shall be made until the new Surety or Sureties shall have furnished an acceptable Bond to the Owner.

- END OF SECTION 00600 -

X:\Project\3000_prj\3818R OID Tunnel 8\Reports\Contract Docs_Specs\DIV 00\00600 Bond Requirements 20210721.docx

SECTION 00601

BID BOND

KNOW ALL PEOPLE BY THESE PRESENTS, that we the undersigned, _____ as Principal, and _____, an admitted California Surety, as Surety, are hereby held and firmly bound unto _____ as OWNER in the penal sum of _____ for the Payment of which, well and truly to be made, we hereby jointly and severally bind ourselves, successors and assigns.

Signed, this _____ day of _____, 2021.

The Condition of the above obligation is such that whereas the Principal has submitted to _____ a certain BID attached hereto and hereby made a part hereof to enter into a contract in writing, for the

_____

NOW THEREFORE,

(a) If said BID shall be rejected, or

(b) If said BID shall be accepted and the Principal shall execute and deliver a Contract in the form of Contract attached hereto (properly completed in accordance with said BID) and shall furnish a BOND for Contractor's faithful performance of said Contract, and for the payment of all persons performing labor or furnishing material in connection therewith, and shall in all other respects perform the agreement created by the acceptance of said BID, then this obligation shall be void, otherwise the same shall remain in force and effect; it being expressly understood and agreed that the liability of the Surety or any and all claims hereunder shall, in no event, exceed the penal amount of this obligation as herein state.

The Surety, for value received, hereby stipulates and agrees that the obligations of said Surety and its BOND shall in no way be impaired or affected by any extension of the time within which the OWNER may accept such BID; and said Surety does hereby waive notice of any such extension.

IN WITNESS WHEREOF, the Principal and the Surety have hereunto set their hands and seals, and such of them as are corporations have caused their corporate seals to be hereto affixed and these presents to be signed by their proper officers, the day and year first set forth above.

_____(L.S.)
Principal

_____ California Certificate No. _____
Surety

_____
Contractor

IMPORTANT – SURETY companies executing BONDS must appear on the Treasury Department's most current list (Circular 570 as amended) and be authorized to transact business in the state where the PROJECT is located.

- END OF SECTION 00601 -

X:\Project\3000_prj\3818R OID Tunnel 8\Reports\Contract Docs_Specs\DIV 00\00601 Bid Bond 20210721.docx

SECTION 00602

PERFORMANCE BOND

Whereas, the Board of Directors of Oakdale Irrigation District, State of California, and _____ (hereinafter designated as "principal") have entered into an agreement whereby principal agrees to perform certain work, which said agreement dated _____ 2021, and identified as Contract Documents for South Main Canal and Tunnel Improvements – Tunnel 8 Rehabilitation, are hereby referred to and made a part thereof; and

Whereas, said principal is required under the terms of said agreement to furnish a bond for the faithful performance of said agreement.

Now, therefore, we, the principal and _____, as surety, are held and firmly bound unto Oakdale Irrigation District in the penal sum of _____ dollars ($_____) lawful money of the United States, for the payment of which sum will and truly to be made, we bind ourselves, our heirs, successors, executors and administrators, jointly and severally, firmly by these presents.

The conditions of this obligation is such that if the above bounded principal, heirs, executors, administrators, successors or assigns, shall in all things stand to and abide by, and will and truly keep and perform the covenants, conditions and provisions in the said agreement and any alteration thereof made as therein provided, on their part, to be kept and performed at the time and in the manner therein specified, and in all respects according to their true intent and meaning, and shall indemnify and save harmless Oakdale Irrigation District, its officers, agents and employees, as therein stipulated, then this obligation shall become null and void; otherwise it shall be and remain in full force and effect.

As a part of the obligation secured hereby and in addition to the face amount specified therefore, there shall be included costs and reasonable expenses, fees, including reasonable attorney's fees, incurred by Oakdale Irrigation District in successfully enforcing such obligation, all to be taxed as costs and included in any judgment rendered.

The surety hereby stipulates and agrees that no change, extension of time, alteration or addition to the terms of the agreement or the work to be performed thereunder or the specifications accompanying the same shall in anywise affect its obligations on this bond, and it does hereby waive notice of any such change, extension of time, alteration or addition to the terms of the agreement or to the work or to the specifications.

In witness whereof, this instrument has been duly executed by the principal and surety above named on _____, 2021.

_____
Principal

By:_____

_____
Surety

By:_____

STATE OF CALIFORNIA)
COUNTY OF_____)

On _____, before me, _____, personally appeared _____, personally known to me (or proved to me on the basis of satisfactory evidence) to be the person(s) whose name(s) is/are subscribed to the within instrument and acknowledged to me that he/she/they executed the same in his/her/their authorized capacity(ies), and that by his/her/their signature(s) on the instrument the person(s), or the entity upon behalf of which the person(s) acted, executed the instrument.

WITNESS my hand and official seal.

Signature_____ (Seal)

- END OF SECTION 00602 -

X:\Project\3000_prj\3818R OID Tunnel 8\Reports\Contract Docs_Specs\DIV 00\00602 Performance Bond 20210721.docx

SECTION 00603

PAYMENT BOND

OAKDALE IRRIGATION DISTRICT
PAYMENT BOND

Whereas, the Board of Directors of Oakdale Irrigation District, State of California, and _____ (hereinafter designated as "Principal") have entered into an agreement whereby the principal agrees to perform certain work, which said agreement dated _____, 2021, and identified as Contract Documents for South Main Canal and Tunnel Improvements Project, Tunnel 8 Rehabilitation, are hereby referred to and made a part thereof; and

Whereas, under the terms of the agreement, the Principal is required before entering upon the performance of the Work, to file a good and sufficient payment bond with Oakdale Irrigation District to secure the claims to which reference is made in Title 15 (commencing with Section 3082) of Part 4 of Division 3 of the Civil Code of the State of California.

Now, therefore, the Principal and _____, as corporate surety, are held firmly bound unto Oakdale Irrigation District and all contractors, subcontractors, laborers, materialmen, and other persons employed in the performance of the agreement and referred to in Title 15 (commencing with Section 3082) of Part 4 of Division 3 of the Civil Code in the sum of _____ dollars ($_____), for materials furnished or labor thereon of any kind, or for amounts due under the Unemployment Insurance Act with respect to this work or labor, that the surety will pay the same in an amount not exceeding the amount hereinabove set forth, and also in case suit is brought upon this bond, will pay, in addition to the face amount thereof, cost and reasonable expenses and fees, including reasonable attorney's fees, incurred by Oakdale Irrigation District in successfully enforcing this obligation, to be awarded and fixed by the court, and to be taxed as costs and to be included in the judgment therein rendered.

It is hereby expressly stipulated and agreed that this bond shall inure to the benefit of any and all persons, companies, and corporations entitled to file claims under Title 15 (commencing with

Section 3082) of Part 4 of Division 3 of the Civil Code, so as to give a right of action to them or their assigns in any suit brought upon this bond.

Should the condition of this bond be fully performed, then this obligation shall become null and void, otherwise it shall be and remain in full force and effect.

The surety hereby stipulates and agrees that no change, extension of time, alteration, or addition to the terms of the agreement or the specifications accompanying the same shall in any manner affect its obligations on this bond, and it does hereby waive notice of any such change, extension, alteration, or addition.

In witness whereof, this instrument has been duly executed by the principal and surety above named, on _____, 2021.

_____
Principal

By:_____

_____
Surety

By:_____

STATE OF CALIFORNIA)
COUNTY OF_____)

On _____, before me, _____, personally appeared _____, personally known to me (or proved to me on the basis of satisfactory evidence) to be the person(s) whose name(s) is/are subscribed to the within instrument and acknowledged to me that he/she/they executed the same in his/her/their authorized capacity(ies), and that by his/her/their signature(s) on the instrument the person(s), or the entity upon behalf of which the person(s) acted, executed the instrument.

WITNESS my hand and official seal.

Signature_____ (Seal)

- END OF SECTION 00603 -

X:\Project\3000_prj\3818R OID Tunnel 8\Reports\Contract Docs_Specs\DIV 00\00603 Payment Bond 20210721.docx

DIVISION 01

SECTION 01005

SPECIFICATIONS

PART 1 - GENERAL

1.01 GENERAL

A. The Contractor shall keep at the jobsite a copy of the Plans and Specifications (Contract Documents) and shall at all times give the Owner and Engineer access thereto.

B. Anything mentioned in the Specifications and not shown on the Plans (Drawings) or shown on the Plans and not mentioned in the Specifications shall be of like effect as if shown or mentioned in both.

C. The Contractor shall not take advantage of any errors, discrepancies or omissions which may exist in the Contract Documents but shall immediately call them to the attention of the Engineer whose interpretation or correction thereof shall be conclusive.

D. In case of conflict between portions of the Contract Documents, the order of precedence of Contract Documents shall be:

First:	Permits from other agencies as may be required by law
Second:	Addenda
Third:	Bidding Requirements, Division 00
Fourth:	General Requirements, Division 01
Fifth:	Plans (Drawings)
Sixth:	Technical Specifications, Division 02 through Division 03
Seventh:	State Standard Specifications
Eighth:	Reference Documents

E. Change Orders, supplemental agreements and/or approved revisions to Contract Documents will take precedence over documents listed above. Detailed Drawings shall have precedence over General Plans.

F. Whenever any conflict appears in any portion of the Contract Documents, it shall be resolved by application of the order of precedence.

1.02 GENERAL CONDITIONS AND TECHNICAL SPECIFICATIONS

A. For definitions of the Specifications categorized as General Conditions (Division 01) and Technical Specifications (Division 02 through Division 03) refer to General Conditions Specification Section 01100, Article 01105 Definitions.

1.03 REFERENCE DOCUMENTS

A. For a definition of State Standard Specifications refer to General Conditions Specifications Section 01100, Article 01105 Definitions.

B. Throughout the following Specification Sections, references are made to various widely published, standard and commercial specifications, manuals, or codes of technical societies, organizations, or associations. These Specifications are intended to amplify the descriptions of materials, equipment, and construction systems. The Contractor shall caution each of their Subcontractors to become familiar with the contents of the pertinent portions of these Reference Documents. The following Reference Documents are the most widely used and are cited or referred to in each of the following sections of these Specifications.

1. American Society of Testing Materials (ASTM), latest editions.

2. American National Standards Institute (ANSI), latest editions.

3. American Standards Associations (ASA), latest editions.

4. American Concrete Institute (ACI), latest editions.

5. Federal Specifications, latest editions.

6. California Building Code (CBC), California Code of Regulations, Title 24, Part 2, Volumes 1 and 2, latest edition.

7. Uniform Plumbing Code, latest edition.

8. National Electric Code, latest edition.

9. California Code Regulations, Title 8, Chapter 4, Division of Industrial Safety (Cal-OSHA), Subchapter 4 – Construction Safety Orders.

10. California Department of Transportation (Caltrans) Standard Specifications, latest edition.

C. Each citation of a Reference Document shall be construed to refer to the latest published revision of such specification as of the date of the invitation for bids and to such portions of it that relate and apply directly to the material or installation

called for on this Project. The Engineer will give no consideration to any claimed ignorance as to what a cited Reference Document contains, because such Subcontractor on a project of this scope is deemed to be experienced and familiar with their own trade and familiar with their own trades generally accepted published standards of quality.

D. Whenever references are made to any of the abovementioned Reference Documents or testing methods in the governing Building Codes, the requirements of those Reference Documents shall govern, insofar as they are not in contravention with maxima or minima prescribed by documents designated in the Building Code.

1.04 LIST OF DRAWINGS

A. The Work shall conform to the following Drawings separately bound and titled: *Oakdale Irrigation District South Main Canal Improvements – Tunnel 8 Rehabilitation.*

1.05 STATE STANDARD SPECIFICATIONS

A. For the purpose of this Contract, the following terms or pronouns in place of them, used throughout the State Standard Specifications and defined in Section 1, Definition of Terms, of the State Standard Specifications, shall be as follows:

TERMS	INTERPRETATION
State	Oakdale Irrigation District
Department	Oakdale Irrigation District
Director	General Manager
Engineer	Oakdale Irrigation District staff engineer or their engineering consultant acting on behalf of the District.
Department of Transportation	Oakdale Irrigation District
Contractor	The person or persons, co-partnership or corporation, private or municipal, who have entered into a contract with the Oakdale Irrigation District as party or parties of the second part, or his or her legal representative.

1.06 OCCUPATIONAL SAFETY AND HEALTH ACT

A. The applicable standards of the American National Standards Institute and the National Fire Protection Association that have been adopted are hereby made a part of these Specifications as a whole and as mentioned in the various sections.

B. Any errors, ambiguities, or inconsistencies of these standards with either the local codes, the Contract Specifications, or the Contract Drawings will be brought to the attention of the Engineer.

1.07 COMPLIANCE WITH ALL LAWS AND CODES

A. Contractor shall conform to and abide by all local, city, county, state and federal laws, rules, regulations, including industrial safety laws. Such laws shall be considered as an essential part of these Specifications and, in the absence of definite requirements herein, the provisions of such rules and regulations shall be observed by the Contractor. If the Contract Drawings and/or Contract Specifications are at variance therewith, Contractor shall so notify Engineer promptly. Should the Contractor perform any work contrary to such laws, ordinances, rules and regulations the Contractor shall bear all costs arising there from.

B. Where these Contract Specifications, however, call for or describe materials workmanship or construction of a better quality, higher standard, or larger size than is required by said rules and regulations, the provisions of these Specifications shall take precedence over said rules and regulations. Contractor shall furnish, without any extra charge, all additional labor or materials, or both, when required for compliance with these rules and regulations.

- END OF SECTION 01005 -

X:\Project\3000_prj\3818R OID Tunnel 8\Reports\Contract Docs_Specs\DIV 01\01005 Specifications 20210721.docx

SECTION 01013

BEGINNING OF WORK, TIME OF COMPLETION, LIQUIDATED DAMAGES

PART 1 - GENERAL

1.01 GENERAL

A. Attention is directed to the provisions in these General Requirements and the General Conditions Section 01100 of these Contract Documents for "Beginning of Work", "Time of Completion" and "Liquidated Damages."

1.02 BEGINNING OF WORK AND TIME OF COMPLETION

A. The Contractor shall begin site work within **thirty (30) calendar days** after receipt of the official Notice-to-Proceed (with access to canal no sooner than November 1) and to complete the Work on or before **February 19, 2022**. The Notice-of-Award is anticipated to be issued on **October 5, 2021**, and the Notice-to-Proceed is anticipated to be issued on **October 18, 2021**. The Construction Start Date shall be no later than **November 8, 2021**.

B. The Contractor shall diligently prosecute the Work to completion on or before the Substantial Completion Date indicated on the Notice-to-Proceed and specified in General Conditions Section 01100, Article 01193 Time of Completion.

1.03 LIQUIDATED DAMAGES

A. The Contractor shall pay to the local agency the sum of **FIVE THOUSAND DOLLARS ($5,000.00)** per day for each and every calendar day delay in finishing the Work after the Substantial Completion Date.

- END OF SECTION 01013 -

X:\Project\3000_prj\3818R OID Tunnel 8\Reports\Contract Docs_Specs\DIV 01\01013 Begin_End_Damages 20210721.docx

SECTION 01022

CHANGE ORDERS

PART 1 - GENERAL

1.01 GENERAL

A. Without invalidating the Contract and without notice to any surety, Owner may, at any time or from time to time, order additions, deletions, or revisions in the Work by a Change Order, or a Work Change Directive. Upon receipt of any such document, Contractor shall promptly proceed with the Work involved which will be performed under the applicable conditions of the Contract Documents.

B. Except as specifically modified herein, Section 4 of the State Standard Specifications in its entirety shall govern the procedures for processing changes, alterations or deviations in the Work. Definitions of changes in the Work and Extra Work and payment for same shall be as described therein.

C. The Owner reserves the right to contract with any person or firm other than the Contractor for any or all Extra Work. The Contractor's attention is especially called to the fact that the Contractor shall be entitled to no claim for damages for anticipated profits on any portion of the Work that may be omitted.

D. All changes which affect the cost of the construction or time of completion of the Project must be authorized by means of a Contract Change Order. The Contract Change Order will include Extra Work, Work for which quantities have been altered from those shown in the Bid Schedule (Section 00530 of the Contract Documents), as well as decreases or increases in the quantities of installed units which are different than those shown in the Bid Schedule because of final measurements.

1.02 COST OF THE WORK

A. Contractor will be allowed the following cost adjustments for Work executed under this Section that results in an increase in cost:

1. Based on Unit Prices where Work performed is similar to the Work included in the Bid Schedule as a Unit Price item.

2. To actual wages paid, a labor surcharge as specified in California Department of Transportation publication “Labor Surcharge and Equipment Rental Rates”.

3. To actual wages paid, including the Labor Surcharge, a fee of fifteen percent (15%).

4. To the costs incurred for material and equipment rental, a fee of fifteen percent (15%).

    a. Equipment rental rates shall be computed on the basis of California Department of Transportation publication "Labor Surcharge and Equipment Rental Rates"

5. To the costs incurred for subcontracted work, a fee of five percent (5%)

    a. Basis of cost shall be the Subcontractor's written quote.

    b. The Engineer shall have the right to require the Contractor to request additional subcontractor bids.

- END OF SECTION 01022 -

X:\Project\3000_prj\3818R OID Tunnel 8\Reports\Contract Docs_Specs\DIV 01\01022 Change Orders 20210721.docx

SECTION 01025

MEASUREMENT AND PAYMENT

PART 1 - GENERAL

1.01 OWNERSHIP OF MATERIAL

A. Material delivered to contractor yard or to jobsite is owned by Contractor.

B. Material installed and approved is then owned by Owner.

1.02 MEASUREMENT

A. Unless otherwise specified in the Contract Documents, quantities of Work shall be determined from measurements or dimensions in a horizontal plane. All measurements shall be made in accordance with United States Standard Measures. All materials shall be measured on the basis of "in-place" quantities paid for the units listed in the Bid Schedule. For materials specified to be measured in place in a structure, the actual volume within the neat lines of the structure, as shown on the Contract Drawings, will be the basis for computing quantities.

B. After the Work has been completed, the Contractor will make field measurements of unit price items in order to determine the quantities of the various items as a basis for payment, and the Engineer will verify and approve quantities. On all unit price items, the Contractor will be paid for the actual amount of the Work performed in accordance with the Contract Documents, as computed from field measurements.

C. Work or quantities not listed in the description of Bid Items are considered incidental to other construction and will not be measured and paid for.

1.03 INCREASED OR DECREASED QUANTITIES

A. Attention is directed to the provisions in Section 9-1.06 of the State Standard Specifications and these General Requirements.

B. All written requests for adjustment shall be made by the Engineer no later than five (5) working days after notification by the Contractor that the item of work is complete and pay quantities have been submitted.

1.04 FINAL PAY QUANTITIES

A. Final pay quantities will be based on quantities submitted by the Contractor and verified and approved by the Engineer.

1.05 PAYMENT OF WITHHELD FUNDS

A. The provisions in Section 9-1.16E of the State Standard Specifications shall not apply.

1.06 PARTIAL PAYMENT

A. Attention is directed to Section 9-1.16 of the State Standard Specifications which, except as modified herein, shall apply in its entirety.

1. The Owner shall withhold not less than 5 percent (5%) of the contract price until final completion and acceptance of the project.

2. Partial payments for materials on hand shall not exceed one hundred percent (100%) of the value of material delivered on site, properly stored in a secured fenced area subject to, or under the control of, the Owner and local agency, and unused. Contractor shall submit copies of invoices of materials to support values. Materials stored shall be installed within sixty (60) days of delivery for payment eligibility.

B. Payment shall not relieve the Contractor from its obligations under the Contract Section 00520; nor shall such payment be construed as acceptance of any of the Work. Payment shall not be construed as transfer of ownership of any equipment or materials to the Owner. Responsibility of ownership shall remain with the Contractor who shall be obligated to protect any fully or partially completed Work or structure for which payment has been made; or replace any materials or equipment to be provided under the Contract which may be damaged, lost, stolen or otherwise degraded in any way prior to acceptance of the Work, except as provided in Section 5-1.39 of the State Standard Specifications.

1.07 FINAL PAYMENT

A. Final payment will be due thirty-five (35) days after the acceptance and the filing of the Notice-of-Completion by the Owner also detailed in the Contract Section 00520 of the Contract Documents.

B. Payment for the Work will be made in accordance with the Standard Procedures of the Owner also detailed in the Contract Section 00520 of the Contract Documents.

C. Upon completion of the Project, the final contract prices shall be revised by Change Order, if necessary, to reflect the true quantities used at the stated Bid Price thereof as contained in the accepted Bid Schedule included in Section 00530 of the Contract Documents. Payments on account thereof will be made as set forth in the Contract Section 00520 of the Contract Documents Contract Documents.

- END OF SECTION 01025 -

X:\Project\3000_prj\3818R OID Tunnel 8\Reports\Contract Docs_Specs\DIV 01\01025 Measurement and Payment 20210721.docx

SECTION 01026

WAIVER AND RELEASE SUBMITTALS

PART 1 - INSTRUCTIONS FOR WAIVER AND RELEASE (LIEN WAIVER) SUBMITTALS

1.01 GENERAL INSTRUCTIONS

A. Waiver and Releases must be submitted on forms attached at the end of this Section. Copies of said forms comply with Civil Code 3262. This applies to Contractor and Subcontractors.

B. Comply with Contract Documents Section 01025 Measurement and Payment.

C. Waiver and Release submittal sequence.

1. Upon initial submittal for progress payment, submit for each subcontractor, material or equipment supplier a "**CONDITIONAL WAIVER AND RELEASE UPON PROGRESS PAYMENT**". If initial submittal is also a final submittal for any or all subcontractors, material or equipment suppliers, submit a "**CONDITIONAL WAIVER AND RELEASE UPON FINAL PAYMENT**" for those suppliers or subcontractors**.**
2. Upon each subsequent submittal for progress payment, submit for each subcontractor, material or equipment supplier a "**CONDITIONAL WAIVER AND RELEASE UPON PROGRESS PAYMENT**" for a total amount reflecting the current progress payment. Also submit an "**UNCONDITIONAL WAIVER AND RELEASE UPON PROGRESS PAYMENT**" reflecting the previous progress payment aggregate sum.
3. Upon submittal for final progress payment, submit for each subcontractor, material or equipment supplier a "**CONDITIONAL WAIVER AND RELEASE UPON FINAL PAYMENT**". Also submit an "**UNCONDITIONAL WAIVER AND RELEASE UPON PROGRESS PAYMENT**" reflecting the previous progress payment aggregate sum.
4. Prior to final payment, submit for each subcontractor, material or equipment supplier a "**CONDITIONAL WAIVER AND RELEASE UPON FINAL PAYMENT**".
5. Upon receipt of final payment**,** Contractor shall submit an "**UNCONDITIONAL WAIVER AND RELEASE UPON FINAL PAYMENT**"

CONDITIONAL WAIVER AND RELEASE UPON PROGRESS PAYMENT

Upon receipt by the undersigned of a check from _____
(Maker of Check)

in the sum of $_____ payable to_____
(Amount of Check) (Payee or Payees of Check)

and when the check has been properly endorsed and has been paid by the bank upon which it is drawn, this document shall become effective to release any mechanic's lien, stop notice, or bond right the undersigned has on the job of

_____ located at _____
(Owner) (Job Description)

to the following extent. This release covers a progress payment for labor, services, equipment, or material furnished to

_____ through _____
(Your Customer) (Date)

only and does not cover any retentions retained before or after the release date; extras furnished before the release date for which payment has not been received; extras or items furnished after the release date. Rights based upon work performed or items furnished under a written change order which has been fully executed by the parties prior to the release date are covered by this release unless specifically reserved by the claimant in this release. This release of any mechanic's lien, stop notice, or bond right shall not otherwise affect the contract right, including rights between parties to the contract based upon the rescission, abandonment, or breach of the contract, or the right of the undersigned to recover compensation for furnished labor, services, equipment, or material covered by this release if that furnished labor, services, equipment, or material was not compensated by the progress payment. Before any recipient of the document relies on it, said party should verify evidence of payment to the undersigned.

DATE: _____ _____
(Company Name)

By: _____ _____
(Signature) (Title)

UNCONDITIONAL WAIVER AND RELEASE UPON PROGRESS PAYMENT

The undersigned has been paid and has received a progress payment in the sum of $_____ for labor, services, equipment and/or material furnished to

_____
(Your Customer)

on the job of _____
(Owner)

located at_____
(Job Description)

and does hereby release any mechanic's lien, stop notice, or bond right that the undersigned has on the above referenced job to the following extent. This release covers a progress payment for labor, services, equipment and/or materials furnished to

_____
(Your Customer)

through _____ only,
(Date)

and does not cover any retentions retained before or after the release date; extras furnished before the release date for which payment has not been received; extras or items furnished after the release date. Rights based upon work performed or items furnished under a written change order which has been fully executed by the parties prior to the release date are covered by this release unless specifically reserved by the claimant in this release. This release of any mechanic's lien, stop notice, or bond right shall not otherwise affect the contract rights, including rights between parties to the contract based upon rescission, abandonment, or breach of the contract, or the right of the undersigned to recover compensation for furnished labor, services, equipment, or material covered by this release if that furnished labor, services, equipment, or material was not compensated by the progress payment.

DATE: _____ _____
(Company Name)

By: _____ _____
(Signature) (Title)

NOTICE: THIS DOCUMENT WAIVES RIGHTS UNCONDITIONALLY AND STATES THAT YOU HAVE BEEN PAID FOR GIVING UP THOSE RIGHTS. THIS DOCUMENT IS ENFORCEABLE AGAINST YOU IF YOU SIGN IT, EVEN IF YOU HAVE NOT BEEN PAID. IF YOU HAVE NOT BEEN PAID, USE A CONDITIONAL RELEASE FORM.

CONDITIONAL WAIVER AND RELEASE UPON FINAL PAYMENT

Upon receipt by the undersigned of a check from _____
(Maker of Check)

in the sum of $_____ payable to _____
(Amount of Check) (Payee or Payees of Check)

and when the check has been properly endorsed and has been paid by the bank upon which it is drawn, this document shall become effective to release any mechanic's lien, stop notice, or bond right the undersigned has on the job of

_____ located at _____
Owner) (Job Description)

This release covers the final payment to the undersigned for all labor, services, equipment, or material furnished on

the job, except for disputed claims for additional work in the amount of $_____.
Before any recipient of this document relies on it, the party should verify evidence of payment to the undersigned.

DATE: _____ _____
(Company Name)

By: _____ _____
(Signature) (Title)

UNCONDITIONAL WAIVER AND RELEASE UPON FINAL PAYMENT

The under signed has been paid in full for all labor, services, equipment or material furnished to

_____ on the job of _____
(Your Customer) (Owner)

located at _____and does
(Job Description)

hereby waive and release any right to a mechanic's lien, stop notice, or any right against a labor and material bond on

the job, except for disputed claims for extra work in the amount of $_____

DATE: _____ _____
(Company Name)

By: _____ _____
(Signature) (Title)

NOTICE: THIS DOCUMENT WAIVES RIGHTS UNCONDITIONALLY AND STATES THAT YOU HAVE BEEN PAID FOR GIVING UP THOSE RIGHTS. THIS DOCUMENT IS ENFORCEABLE AGAINST YOU IF YOU SIGN IT, EVEN IF YOU HAVE NOT BEEN PAID. IF YOU HAVE NOT BEEN PAID, USE A CONDITIONAL RELEASE FORM.

- END OF SECTION 01026 -

X:\Project\3000_prj\3818R OID Tunnel 8\Reports\Contract Docs_Specs\DIV 01\01026 Waiver and Release 20210721.docx

SECTION 01052

ENGINEER'S STATUS DURING CONSTRUCTION

PART 1 - GENERAL

1.01 OWNER'S REPRESENTATIVE

A. The Engineer will be Owner's Representative during the construction period. The duties and responsibilities and the limitations of authority of the Engineer as Owner's Representative during construction are set forth in the Contract Documents and will not be changed without written consent of Owner and Engineer.

1.02 VISITS TO SITE

A. Engineer will make visits to the Site at intervals appropriate to the various stages of construction as Engineer deems necessary in order to observe the progress that has been made and the quality of the various aspects of Contractor's executed Work. Based on information obtained during such visits and observations, Engineer, for the benefit of Owner, will determine, in general, if the Work is proceeding in accordance with the Contract Documents. Engineer will not be required to make exhaustive or continuous inspections on the Site to check the quality or quantity of the Work. Engineer's efforts will be directed toward providing for Owner a greater degree of confidence that the completed Work will conform generally to the Contract Documents. On the basis of such visits and observations, Engineer will keep Owner informed of the progress of the Work and will endeavor to guard Owner against defective Work.

B. Engineer visits and observations are subject to all the limitations on Engineer's authority and responsibility set forth in this Section, Article 1.05 Limitations on Engineer's Authority and Responsibilities. Particularly, but without limitation, during or as a result of Engineer visits or observations of Contractor's Work, Engineer will not supervise, direct, control, or have authority over or be responsible for Contractor's means, methods, techniques, sequences, or procedures of construction, or the safety precautions and programs incident thereto, or for any failure of Contractor to comply with laws and regulations applicable to the performance of the Work.

C. Review of the Work by the Engineer shall not relieve the Contractor of the obligation to fulfill all conditions of the Contract.

D. No oral or telephonic agreement or conversation with any officer, agent or employee of the Owner or the Engineer, or with the Engineer, either before or after execution of the Contract, shall affect or modify any of the terms or obligations contained in any of the Contract Documents.

E. The Contractor shall pay the Owner for all overtime review in accordance with existing resolutions or fee schedules of the Owner, unless the charges for such inspection have been specifically waived in the Contract Documents. Overtime charges will be made for all reviews on Saturdays, Sundays and federal holidays, and hours worked by the reviewer other than those of the normal work day.

1.03 AUTHORIZED VARIATIONS IN WORK

A. Engineer may authorize minor variations in the Work from the requirements of the Contract Documents which do not involve an adjustment in the Contract Price or the Contract Time of Completion and are compatible with the design concept of the completed Project as a functioning whole as indicated by the Contract Documents. These may be accomplished by a Change Order and will be binding on Owner and also on Contractor, who shall perform the Work involved promptly. If Owner or Contractor believes that a Change Order justifies an adjustment in the Contract Price or Contract Time of Completion, or both, and the parties are unable to agree on entitlement to or on the amount or extent, if any, of any such adjustment, a Claim may be made therefore as provided within the Contract Documents.

B. Clarification of specific details or contract requirements as needed by the Contractor shall be made by a Request for Information.

1.04 REJECTING DEFECTIVE WORK

A. Engineer will have authority to reject Work which Engineer believes to be defective, or that Engineer believes will not produce a completed Project that conforms to the Contract Documents or that will prejudice the integrity of the design concept of the completed Project as a functioning whole as indicated by the Contract Documents. Engineer will also have authority to require special inspection or testing of the Work, whether or not the Work is fabricated, installed, or completed. Neither this authority nor the Engineer's good faith judgment to reject or not reject any Work shall subject the Engineer to any liability or cause of action by the Contractor, Subcontractors, or any other suppliers or persons performing Work on the Contract.

1.05 LIMITATIONS ON ENGINEER'S AUTHORITY AND RESPONSIBILITIES

A. Engineer will not supervise, direct, control, or have authority over or be responsible for Contractor's means, methods, techniques, sequences, or procedures of construction, or the safety precautions and programs incident

thereto, or for any failure of Contractor to comply with laws and regulations applicable to the performance of the Work. Engineer will not be responsible for Contractor's failure to perform the Work in accordance with the Contract Documents.

B. Engineer will not be responsible for the acts or omissions of Contractor or of any Subcontractor or any supplier or of any other individual or entity performing any of the Work.

C. Engineer's review of the final Application for Payment and accompanying documentation and all maintenance and operating instructions, schedules, guarantees, bonds, certificates of inspection, tests and approvals, and other documentation required, that their content complies with the requirements of, and in the case of certificates of inspections, tests, and approvals that the results certified indicate compliance with the Contract Documents.

D. The limitations upon authority and responsibility shall also apply to, the Resident Project Representative, if any, and assistants, if any.

- END OF SECTION 01052 -

X:\Project\3000_prj\3818R OID Tunnel 8\Reports\Contract Docs_Specs\DIV 01\01052 Engineers Status 20210721.docx

SECTION 01100

GENERAL CONDITIONS

01105 DEFINITIONS

A. The Contract Documents consist of the Contract (also referred to as "Agreement") and the following:

- Contract Documents dated July 21, 2021
- Contract Bidding Requirements
- Accepted Bid
- Faithful Performance Bond and Payment Bond
- Any Published Addenda or Supplements
- Contract Drawings including any amendments
- Contract General Conditions
- Contract Technical Specifications

B. The Owner and the Contractor are those mentioned as such in the Agreement.

C. The term Subcontractor, as employed herein, includes only those having a direct contract with the Contractor and it includes one who furnishes material worked to a special design according to the Contract Drawings and Specifications of this Work, or labor at the Project Site, but does not include one who merely furnishes material not so worked.

D. The Engineer, as employed herein, includes the Project Construction Manager and Engineer, Condor Earth (Condor). Condor shall serve as the Client Representative of the Owner at the Site.

E. Where in any of the Contract Documents or in the complete Contract there is any provision in respect to the giving of any notice, such notice shall be deemed to have been given (as to the Owner) when written notice shall have been placed in the United States mail addressed to the Owner at its place of business; (as to the Contractor) when written notice shall be delivered to the chief representative of the Contractor at the Site of the Project or by mailing such written notice in the United States mail addressed to the Contractor at the place stated in the papers prepared by Contractor to accompany the Bid as the address of Contractor's permanent place of business.

F. The term "Work" of the Contractor or Subcontractor includes labor or materials or both.

G. All time limits stated in the Contract Documents are of the essence of the Contract.

H. State Standard Specifications is defined as State of California, Department of Transportation (Caltrans), Standard Specifications, latest edition.

01110 EXECUTION, CORRELATION AND INTENT OF DOCUMENT

A. The Contract Documents are complementary, and what is called for by any one shall be as binding as if called for by all. The intention of the documents is to include in the Contractor's Bid the costs of all labor and materials, equipment and transportation necessary for the proper execution of the Work. Materials or work described in words which so applied have a well-known technical or trade meaning shall be held to refer to such recognized standards.

01115 DETAIL DRAWINGS AND INSTRUCTION

A. The Engineer shall prepare and file Plans and Specifications or a Work Authorization describing the Work to be performed, together with an approximate estimate of the unit quantities, prior to commencement of the Work.

B. The Engineer shall furnish with reasonable promptness, additional instructions, by means of drawings or otherwise, necessary for the proper execution of the Work. All such drawings and instructions shall be consistent with the Contract Documents, true developments thereof and reasonably inferable therefrom.

C. The Work shall be executed in conformity therewith and the Contractor shall do no Work without proper drawings and/or instructions.

01120 CONTRACTOR SUBMITTALS

A. The Contractor shall check and verify all field measurements and submit with such promptness as to cause no delay in Contractor's own work or in that of any other Contractor, six (6) copies of all shop drawings or material submittals and schedules required for the Work of the various trades (Submittals), and the Engineer shall pass upon them with reasonable promptness, making desired corrections, including all necessary corrections relating to artistic effect. In lieu of six (6) copies, the Contractor may submit one electronic submittal in Microsoft compatible program format. The Engineer's "review-and-acceptance" of Submittals shall not relieve the Contractor from responsibility for deviations from the Contract Documents, unless the Contractor has, in writing, secured the Engineer's "Acceptance" of such deviations, nor shall it relieve Contractor from responsibility for errors.

B. Contractor agrees that Submittals processed by the Engineer are not Change Orders; that the purpose of Submittals by the Contractor is to demonstrate to the Engineer that the Contractor understands the intent of the Contract Documents, that the Contractor demonstrates their understanding by indicating which equipment and material they intend to furnish and install and by detailing the fabrication and installation methods they intend to use.

C. Contractor further agrees that if deviations, discrepancies or conflicts between Submittals and Contract Documents are discovered either prior to or after Submittals are processed by the Engineer, the design Contract Drawings and Specifications shall control and shall be followed.

1. Unless otherwise stipulated, the Contractor shall provide and pay for all materials, labor, water, tools, equipment, light, power, transportation and other facilities necessary for the execution and completion of the Work.

2. Unless otherwise specified, all materials shall be new and both workmanship and materials shall be of good quality. The Contractor shall, if required, furnish satisfactory evidence as to the kind and quality of materials.

3. The Contractor shall employ on the Work only workmen skilled in the Work assigned to them, and the Owner shall have the right to require the removal from this Work of any employee unacceptable to Owner.

01125 ROYALTIES AND PATENTS

A. The Contractor shall pay all royalties and license fees. The Contractor shall defend all suits or claims for infringement of any patent rights and shall hold the Owner harmless from loss on account thereof, except that the Owner shall be responsible for all such loss when a particular process or the product of a particular manufacturer or manufacturers is specified, but if the Contractor has information that the process or article specified is an infringement of a patent the Contractor shall be responsible for such loss unless the Contractor promptly gives such information to the Engineer or Owner. The approval of any method of construction, invention, appliance, process, article, device or material of any kind by the Engineer or Owner shall only be an approval of its adequacy for the work and shall not be an approval of the use thereof by the Contractor in violation of any patent or other rights of any third person.

01130 PERMITS, REGULATIONS AND TAXES

A. Permits and licenses necessary for the prosecution of the Work shall be secured and paid for by the Contractor unless otherwise specified.

B. The Contractor shall give all notices and comply with all laws, ordinances, rules and regulations bearing on the conduct of the Work as drawn and specified in the Contract Drawings and Specifications. If the Contractor observes that the Contract Drawings and Specifications are at variance therewith the Contractor shall promptly notify the Engineer in writing, and any necessary changes shall be adjusted as provided in the Contract Documents for changes in the Work.

C. The Contractor shall not proceed with the performance of any such Work until such changes are agreed upon. If the Contractor performs any Work knowing it to be contrary to such laws, ordinances, rules and regulations, without such notice to the Engineer and such adjustments of changes as aforesaid, then the Contractor shall bear all costs arising from or in connection with such Work.

D. The Contractor shall pay for all federal, state and local taxes on all materials and labor services furnished by him and all taxes arising out of the operations under this Contract.

01135 PROTECTION OF WORK AND PROPERTY

A. The Contractor shall continuously maintain adequate protection of all their Work from damage and shall protect the Owner's property from injury or loss arising in connection with this Contract. Contractor shall make good any such damage, injury or loss, except such as may be directly due to errors in the Contract Documents or caused by agents or employees of the Owner. Contractor shall adequately protect adjacent property, including as provided by law and the Contract Documents, and shall make good any damage, injury or loss thereto arising in connection with this Contract.

01140 ACCIDENT PREVENTION

A. Precaution shall be exercised at all times for the protection of persons (including employees) and property. The safety provisions of applicable laws, building and construction codes shall be observed. Machinery and equipment shall be guarded, and all hazards eliminated in accordance with the safety provisions of the Manual of Accident Prevention in Construction, published by the Associated General Contractors of America, to the extent that such provisions are not in contravention of applicable law.

01145 INSPECTION OF WORK

A. The Engineer, Engineer's representatives, and the Owner's representatives shall, at all times, have access to the Work and the Contractor shall provide proper facilities for such access and for inspection and sample collection.

B. Re-examination of questioned Work may be ordered by the Engineer, and, if so ordered, the Work must be uncovered by the Contractor. If such Work be found in

accordance with the Contract Documents, the Owner shall pay the cost of re-examination and replacement. If such Work be found not in accordance with the Contract Documents, the Contractor shall pay such costs, unless they can show that the defect in the Work was caused by some other Contractor for whose work the Contractor herein is not responsible, and, in that event, the Contractor herein shall not be liable for such cost.

C. All work shall be under the direct inspection of the Engineer for Oakdale Irrigation District.

D. Where the Contract Drawings and Specifications do not state the amount and location of inspection, material sampling, and material testing, the Engineer shall determine the amount and location of such Work in accordance with the current edition of the California Building Code. The Engineer may make additions or reductions to the amount of testing and inspections where deemed appropriate.

01150 CONTRACTOR'S SUPERINTENDENCE AND SUPERVISION

A. Contractor shall keep on their Work, during its progress, a competent superintendent and any necessary assistants, all satisfactory to the Engineer. The Superintendent shall not be changed except with the consent of the Engineer, unless the Superintendent proves to be unsatisfactory to the Contractor and ceases to be in Contractor's employ, or unless the Superintendent proves to be unsatisfactory to the Owner. The Superintendent shall represent the Contractor in the absence of Contractor's Project Manager or other senior representative, and all directions given to Superintendent shall be as binding as if given to the Contractor. Other directions shall be so confirmed on written request in each case.

B. The Contractor shall give efficient and competent supervision to the Work. Contractor shall carefully study and compare all Contract Drawings and Specifications, and other instructions and shall at once report to the Engineer any error, inconsistency or omission which Contractor may discover, but Contractor shall not be held responsible for their existence or discovery.

C. The Contractor shall be specifically responsible for the coordination of all Work performed under this Contract and exploration Work directed by the Owner or Engineer. Coordination shall be interpreted to include general layout of the structures, coordination of the layout and Work under various sections, scheduling the sequence of operations ensuring safety and cooperation between the trades, and the preparation of diagrams and drawings necessary to ensure proper and expeditious completion of all Work.

D. Each Subcontractor shall be responsible for the proper laying out of their own Work, shall coordinate their layout and Work with the Work of the other sections, and shall be responsible for any damage which may occur to the Work of any other Subcontractor or Contractor because of errors or inaccuracy. Neither the Engineer,

nor the Engineer's representatives, will, in any case, assume the responsibility for laying out the Work.

01155 CHANGES IN THE WORK

A. The Owner, without invalidating the Contract, may order Extra Work or make changes by altering, adding to, or deducting from the Work, the Contract Sum being adjusted accordingly based on the unit prices submitted in the Bid, and also as per Section 01022 Change Orders. All such Work shall be executed under the conditions of the original Contract except that any claim for extension of time caused thereby shall be adjusted only when the project completion date cannot be achieved as contracted.

B. In giving instructions, the Engineer shall have authority to make changes in the work quantities up to a total Contract price difference of twenty-five percent (25%), not involving changes to unit prices, and not inconsistent with the purposes of the Project. No Extra Work or change shall be made unless in pursuance of a written order signed by the Owner and countersigned by the Engineer for lump sum items.

C. The value of any such Extra Work or change shall be determined in one of the following ways:

1. By unit prices contained in the original bid.

2. By an acceptable lump sum proposal.

3. On a cost plus limited percentage basis (defined as cost of labor, materials and equipment plus a specified percentage of these items, but not to exceed fifteen percent (15%) of the aggregate of the cost of such labor, materials and equipment).

01156 CLAIMS FOR EXTRA COST

A. All claims for extension, or extra costs of $375,000 or less, except those cost changes resulting by changes in unit quantities, which are not resolved by change order shall be resolved in accordance with California PCC § 20104, and following, a copy of which is attached to these General Conditions.

01157 DEDUCTIONS FOR UNCORRECTED WORK

A. If the Engineer and Owner decline to correct Work injured or done not in accordance with the Contract, an equitable deduction from the Contract price shall be made therefore.

01158 DELAYS AND EXTENSION OF TIME

A. If the Contractor is delayed at any time in the progress of the Work by neglect of the Owner or the Engineer, or of any employee of either, or by any separate Contractor employed by the Owner, or by changes ordered in the Work or by strikes, lockouts, fire, unusual delay in transportation, unavoidable casualties or any cause beyond the Contractor's control, or by any cause which the Engineer shall decide justifies the delay, then the time of completion shall be extended for such reasonable time as the Engineer may decide.

B. No such extension shall be made for delay occurring more than seven (7) days before claim therefore is made in writing to the Engineer. In the case of a continuing cause of delay, only one claim is necessary.

C. If no schedule or agreement stating the dates upon which Drawings shall be furnished is made, then no request for delay shall be allowed on account of failure to furnish Drawings until one (1) week after demand for such Drawings and not then unless such request be reasonable.

D. If the Contractor foresees that actions by the Owner will be cause for delay, the Contractor shall notify the Engineer immediately.

01160 CORRECTIONS OF WORK BEFORE FINAL PAYMENT

A. The Contractor shall promptly remove from the premises all materials condemned by the Engineer as failing to conform to the Contract, whether incorporated in the Work or not, and the Contractor shall promptly replace and re-execute their own Work in accordance with the Contract and without expense to the Owner and shall bear the expense of making good Work of other Contractors destroyed or damaged by such removal or replacement.

B. If the Contractor does not remove such condemned Work and materials within a reasonable time, fixed by written notice, the Owner may remove them and may store the material at the expense of the Contractor.

01161 CORRECTION OF WORK AFTER FINAL PAYMENT

A. Neither the final certificate nor payment nor any provision in the Contract Documents shall relieve the Contractor of responsibility for faulty materials or workmanship, and, unless otherwise specified, he shall remedy any defects due thereto and pay for any damage to their Work resulting therefrom that shall appear within a period of one (1) year from the date of the acceptance by the Owner. The Owner shall give notice of observed defects with reasonable promptness. All questions arising under this article shall be decided by the Engineer, subject to the right of either party to obtain judicial review.

01162 OWNER'S RIGHT TO DO WORK

A. If the Contractor should neglect to prosecute the Work properly or fail to perform any provisions of the Contract, the Owner, after three (3) days written notice to the Contractor, may without prejudice to any other remedy he may have, make good such deficiencies and may deduct the cost thereof from the payment then or thereafter due to the Contractor; provided, however, that the Engineer shall approve both such action and the amount charged to the Contractor.

01170 PAYMENT

A. The Owner will cause partial payment to be made to the Contractor as provided in General Conditions Section 01025 Measurement and Payment and Contract Documents Section 00520 Contract on the basis of a duly certified approved estimate of the Work completed and certified payroll documentation submitted pursuant to this Contract and approved by the Engineer.

B. Waiver and Release submittals shall be provided from Contractor and Subcontractors with Contractor pay requests as per General Conditions Section 01026 Waiver and Release Submittals.

01171 OWNER'S RIGHT TO WITHHOLD CERTAIN AMOUNTS AND MAKE APPLICATION THEREOF

A. The Owner may withhold from agreed payments to the Contractor such an amount or amounts as may be necessary to cover:

1. Payments that may be earned or due for just claims for labor or materials furnished in and about the Work;

2. Defective Work not remedied;

3. Failure of a Contractor to make proper payments to their Subcontractors;

4. Reasonable doubt that the Contract can be completed for the balance then unpaid; and

5. Evidence of damage to another Contractor or the Owner.

B. In any of the above instances, the Owner shall disburse and shall have the right to act as agent for the Contractor in disbursing such funds as have been withheld pursuant to this paragraph to the party or parties who are entitled to payment therefrom. The Owner will render a proper accounting of all such funds disbursed.

01172 CONTRACTOR'S INSURANCE

A. The Contractor shall not commence Work under this Contract until he has obtained all insurance required under this section, and any additional insurance as stipulated within the Contract Documents, and such insurance, and companies carrying such insurance, have been approved by the Owner; nor shall the Contractor allow any Subcontractor to commence Work on the subcontract until all similar insurance required of the Subcontractor has been so obtained and approved.

1. Compensation Insurance: The Contractor shall take out and maintain during the life of this Contract, Workers' Compensation insurance for all of its employees employed at the site of the project and, in case any work is sublet, the Contractor shall require the Subcontractor similarly to provide Workers' Compensation insurance for all of the latter's employees unless such employees are covered by the protection afforded by the Contractor. In case any class of employees engaged in hazardous Work under this Contract at the site of the project is not protected under the Workers' Compensation statute, the Contractor shall provide Employer's Liability Insurance for the protection of its employees not otherwise protected.

2. Comprehensive Liability and Property Damage Insurance: The Contractor shall take out and maintain during the life of this Contract such Comprehensive Liability and Property Damage insurance in which the Owner and Engineer shall be named as additional insured and which shall protect him and any Subcontractor performing Work covered by this Contract, from claims for damages for personal injury, including accidental death, as well as claims for property damages, which may arise from operations under this Contract, whether such operations be by himself or by any Subcontractor or by anyone directly or indirectly employed by either of them, and shall include a hold harmless agreement which will indemnify the Owner and the Engineer for loss or damage howsoever caused by the Contractor in performing the Contract, and the amounts of such insurance shall be as follows:

   Bodily Injury, Property Damage and Personal Injury – $1,000,000.00 each occurrence, $2,000,000.00 aggregate.

   This insurance shall be on an occurrence basis and shall protect the Contractor against liability arising from: Contractor's operations, operations by Subcontractors, elevators, products, completed operations and contractual liability assumed under the indemnity provisions above insurance.

3. Automobile Insurance: The Contractor shall take out and maintain during the life of their Contract, Automobile Public Liability insurance in amounts not less than $1,000,000 per occurrence and Property Damage Liability

insurance in amount not less than $1,000,000, if any teams or motor vehicles are engaged in operations within the terms of this Contract on the site of the Work to be performed thereunder, covering the use of all such teams or motor vehicles, unless such coverage is included in the insurance required by sub-section 2 hereof.

B. It is understood that the Contractor will submit prior to the execution of the final Contract, Certificates of Insurance evidencing coverage as set forth herein and which shall name the Owner, which shall include the District, its directors, officers, employees and volunteers, and the Engineer and their employees as an additional insured under all such policies. Any and all amounts of deductible shall be assumed by the Contractor at its sole risk.

C. Cancellation Clause – All policies must provide for thirty (30) days cancellation notice in writing to the Owner and the Engineer before cancellation becomes effective.

D. The Owner may accept insurance covering a Contractor or Subcontractor in character and amounts less than the standard requirements set forth herein where such standard requirements appear excessive because of the character or extent of the Work to be performed by such Contractor or Subcontractor; but such acceptance as to any Contractor or Subcontractor shall not thereby relieve any other Contractor or Subcontractor of meeting the full extent of the requirements herein.

01173 INDEMNIFICATION OF OWNER AND ENGINEER

A. Contractor agrees to protect, indemnify, and hold the Owner and Engineer harmless from and against any and all liability, loss or expense (including attorney's fees) in connection with any claim, demand, action, or cause of action asserted against Owner or Engineer because of any injury to, or death of, any person or persons, and/or loss of, or damage to, any property, however caused, which results from or is alleged to result from, or occurs in connection with the performance of this Contract, whether before or after completion, by Contractor, its agents, employees, or subcontractors, except where such injury, death, loss, or damage, is caused by the sole negligence of Owner or Engineer.

B. As a part of such indemnification, Contractor agrees, if requested by Owner or Engineer, to assume, without expense to Owner or Engineer, the defense of any such claim, demands, actions or causes of action.

01174 SURETY BONDS

A. The Contractor shall furnish bonds covering the faithful performance of the Contract and the payment of all obligations arising thereunder, each in the amount of one hundred percent (100%) of the estimated or bid amount, whichever is greater, as stated in the Contract and in such form as the Owner may prescribe and

with such sureties as he may approve. The cost of the premium shall be paid by the Contractor.

01175 DAMAGES

A. If either party to this Contract should suffer damage in any manner because of any wrongful act or neglect of the other party or of anyone employed by party, then party shall be reimbursed by the other party for such damage.

B. Should the Contractor fail to complete the Work included in the Contract within the time limit agreed upon or such extensions thereof as may be granted, a deduction of **FIVE THOUSAND DOLLARS ($5,000) per day** will be made from amounts otherwise due the Contractor per day for each and every calendar day delay in finishing the Work after the Substantial Completion Date.

C. Claims under this clause shall be made in writing to the party liable within a reasonable time after the first observance of such damage and not later than the time of final payment, except as otherwise provided in the Contract Documents in the case of faulty work or materials.

01176 TRANSFER OF CONTRACT

A. The Contractor shall not transfer this Contract without the approval of the Owner. No transfer shall, under any circumstances relieve the Contractor of its liabilities and obligations under this Contract. No transfer shall be made until after the Surety has been given due notice of such transfer and has furnished written consent thereto.

01177 SUBCONTRACTORS AND SUPPLIERS

A. The Contractor shall submit with the Bid a list of all Subcontractors and Suppliers who will perform Work in excess of one-half of one percent (0.5%) of the Contractor's total Price and suppliers providing more than twenty thousand dollars ($20,000) in supplies/materials, and the Contractor shall not employ any that the Engineer may within a reasonable time object to as incompetent or unfit, or having previously provided unsuitable materials.

B. The Contractor agrees that they are fully responsible to the Owner for the acts and omissions of its Subcontractors and of persons either directly or indirectly employed by them, as well as for the acts and omissions of persons directly employed by him.

C. Nothing contained in the Contract Documents shall create any contractual relation between any Subcontractor and the Owner.

D. The Contractor shall not substitute Subcontractors and Suppliers without prior notification to the Engineer, and in accordance with the Contract Documents.

01180 ENGINEER'S STATUS

A. The Engineer shall have general supervision and direction of the Work as provided in Engineer's Contract with the Owner. The Engineer is an agent of the Owner only to the extent provided in the Contract Documents and when in special instances the Engineer is authorized by the Owner so to act, and in such instances Engineer shall, upon request, show the Contractor written authority. The Engineer has authority to stop the Work whenever such stoppage may be necessary to insure the proper execution of the Contract.

B. As the Engineer is in the first instance, the interpreter of the conditions of the Contract and the judge of its performance he shall side neither with the Owner nor with the Contractor but shall use their powers under the Contract to enforce its faithful performance by both.

01181 ENGINEER'S DECISIONS

A. The Engineer shall, within a reasonable time, make decisions on all claims of the Owner or Contractor and on all other matters relating to the execution and progress of the Work or the interpretation of the Contract Documents.

B. The Engineer's decisions, in matters relating to artistic effect, shall be final, if within the terms of the Contract Documents.

01182 DISPUTES

A. Any disputes, claims or questions arising under the Contract or any documents thereof shall be resolved pursuant to California PCC §§ 20104 – 20104.6, a copy of which is attached.

01190 CALIFORNIA OCCUPATIONAL SAFETY AND HEALTH ACT

A. The Contractor shall conduct their operations in accordance with the rules and regulations of the California Division of Industrial Safety and the current requirements of the California Occupational Safety and Health Administration (CAL/OSHA), Construction Safety Orders.

B. The Contractor shall submit to the Engineer at the pre-construction meeting written copies of a Site Specific Safety Work Plan (Safety Plan). The Contractor will not be permitted to commence any Work until the Engineer has "reviewed" the Safety Plan (the Engineer is not obligated to approve the Contractor's Safety Plan). The Safety Plan shall include but not be limited to work procedures, material and equipment to be used, hazard prevention, method of rescue, prevention of injury, protection of personnel by use of protective garments, and other health and safety standards. The Safety Plan shall also include, at a minimum, a detailed description

of safety measures for soil and rock excavation, concrete/shotcrete construction, work in and adjacent to canals and tunnels. Describe all safety precautions to be undertaken and identify any special protective gear and equipment to be utilized.

C. The Contractor shall do whatever Work is necessary for safety and be solely and completely responsible for conditions on the job site, including safety of all personnel (including Owner and Engineer's employees) and Owner's property during the Contract period. The requirement shall apply continuously and not be limited to normal working hours.

D. The Safety Plan includes operations in accordance to California Code of Regulations, Title 8, Construction Safety Orders and all applicable state safety statues in the performance of work hereunder so as not to cause loss or delay. To the extent allowed by law, the Contractor shall indemnify and hold both the District and the Engineer harmless from any liability, claim, demand, fire or loss whatsoever resulting from arising out of or connected with Contractor's failure or alleged failure to comply with such statues, including, but not limited to attorney's fees and expenses arising directly or indirectly out, or by reason, of said compliance. Should the Contractor be found to be in serious violation of any Cal/OSHA safety requirements and/or in imminent danger, the Engineer is obligated to stop the Work immediately. No further Work shall be permitted until the Contractor can demonstrate to the Engineer's satisfaction that Work can be completed in accordance with safety requirements. The Engineer or Owner shall not be held responsible for lost work costs and time for a "stop work order" resulting from a proven Contractor's safety violation.

E. The Contractor shall submit at the preconstruction meeting, in addition to a Site Specific Safety Plan, an Injury and Illness Prevention Program (IIPP) and a Hazard Communication Program for the Engineer to "review." The IIPP shall include but not be limited to work procedures, materials and equipment to be used, hazard preventions, fire prevention, method of rescue, prevention of injury, protection of personnel by use of protective garments, and other health and safety standards.

F. Contractor's employees and Subcontractors must be under the direct supervision of a "Competent Person" at all times for the protection of personnel. "Competent Person" is defined in California Code of Regulations, Title 8, Construction Safety Orders, Article 2, Section 1504 – Definitions.

G. Daily inspections of excavation and all work shall be made by a "Competent Person" for the protection of construction personnel.

H. The Contractor shall prevent public access to unauthorized personnel from entering the job site during construction. The Contractor shall provide construction signs stating that public access is strictly prohibited. The public access prevention requirement shall apply continuously and shall not be limited to normal working hours.

01191 DIFFERING SITE CONDITIONS/EXCAVATION REQUIREMENTS

A. If the Contract involves excavations that extend below the surface, the Contractor shall:

1. Promptly, and before the following conditions are disturbed, notify the public entity, in writing, of any:

a. Material that the Contractor believes may be hazardous waste, as defined in Section 25117 of the California Health and Safety Code that is required to be removed to a Class I, Class II, or Class III disposal site in accordance with provisions of existing law.

b. Unknown physical conditions at the Site of any unusual nature, different materially from those ordinarily encountered and generally recognized as inherent in work of the character provided for in the Contract.

B. The Engineer and/or Owner shall promptly investigate the conditions, and if it finds that the conditions do materially so differ, or do involve hazardous waste, and cause a decrease or increase in the Contractor's cost of, or the time required for, performance of any part of the Work shall issue a Change Order under the procedures described herein. In the event that a dispute arises between the public entity and the Contractor whether the conditions materially differ, or involve hazardous waste, or cause a decrease or increase in the Contractor's cost of, or time required for, performance of any part of the Work, the Contractor shall not be excused from any scheduled completion date provided for by the Contract, but shall proceed with all Work to be performed under the Contract. The Contractor shall retain any and all rights provided herein which pertain to the resolution of disputes and protests between the contracting parties.

01192 UTILITY RELOCATION

A. The Contractor shall notify Underground Service Alert (USA) as required by law prior to any excavation or utility relocation work. If the Contractor fails to notify USA, the responsibility of the Owner and Engineer described in this Section shall be nullified.

B. Owner shall assume the responsibility for the timely removal, relocation, or protection of existing main or trunk line utility facilities that may be located on the Site if either Owner or Engineer fails to identify the utilities in the Contract Drawings and Specifications made a part of the Notice Inviting Bids, and Owner shall compensate Contractor for the costs of locating, repairing damage not due to the failure of the Contractor to exercise reasonable care, and removing or relocating such utility facilities not indicated in the Contract Drawings and Specifications with

reasonable accuracy, and for equipment on the project necessarily idled during such work. If the Contractor while performing the Contract discovers utility facilities not identified by the public agency in the Contract Drawings and Specifications, or USA request, he shall immediately notify Owner or Engineer in writing.

C. Contractor shall not be assessed liquidated damages for delay in completion of the project, when such delay was caused by the failure of the public agency or the owner of the utility to provide for removal or relocation of such utility facilities.

D. Nothing herein shall be deemed to require the District to indicate the presence of existing service laterals or appurtenances whenever the presence of such utilities on the site of the construction project can be inferred from the presence of other visible facilities, such as structures, meter and junction boxes, ditches on or adjacent to the site of the construction.

01193 TIME OF COMPLETION

A. The Contractor shall commence site work within thirty (30) calendar days after receipt of Notice-to-Proceed. The Contractor shall complete the Contract Work within the time limit (or prior to the required Substantial and Final Completion Dates) specified herein:

Substantial Completion Date – February 19, 2022
Final Completion Date – March 31, 2022

01194 UNFAIR BUSINESS PRACTICES CLAIMS

A. In entering into this Contract, Contractor offers and agrees to assign to the Owner all rights, title, and interest in and to all causes of action it may have under Section 4 of the Clayton Act (15 U.S.C. SeciS) or under the Cartwright Act (Chapter 2 (commencing with Section 16700) of Part 2 of Division 7 of the Business and Professions Code), arising from purchases of goods, services, or materials pursuant to the public works contract or subcontract. This assignment is made and becomes effective at the time the Owner tenders final payment to the Contractor, without further acknowledgment by the parties.

01195 OWNER’S RIGHT TO TERMINATE, AMEND OR MODIFY CONTRACT

A. Contractor shall not be responsible for the cost of repairing or restoring damage to the Work, which damage is determined to have been proximately caused by an act of God, in excess of five percent (5%) of the Contract amount, provided, that the Work damaged is built in accordance with accepted and applicable building standards, the current edition of the California Building Code and the Contract Drawings and Specifications of the awarding authority. "Acts of God" shall include only the following occurrences or conditions and effects: earthquakes in excess of a magnitude of 3.5 on the Richter Scale, precipitation or wind storm events greater

than a 25-year event as determined by a local public agency or a national weather agency or other event designated a Disaster Area by FEMA.

B. Owner may make changes in the Contract in the course of construction to bring the completed improvements into compliance with environmental requirements or standards established by state and federal statutes and regulations enacted after the Contract has been awarded or entered into. Contractor shall be paid for the changes in accordance with the provisions of the Contract governing payment for changes in the Work or, if no provisions are set forth in the Contract, payment shall be as agreed to by the parties.

C. Owner may, by mutual consent of the contracting parties, terminate, amend, or modify the Contract. The compensation payable, if any, for amendments and modifications shall be determined as the parties so agree. The compensation payable, if any, in the event the contract is so terminated shall be determined as the parties so agree or under applicable statutory provision providing for the termination.

D. Owner may, at its discretion, terminate the Contract for environmental considerations, whether or not such considerations were foreseen at the time the parties entered into the Contract.

E. If the Contractor should be adjudged bankrupt, or if they should make a general assignment for the benefit of their creditors, or if a receiver should be appointed on account of their insolvency, or if Contractor should persistently or repeatedly refuse or should fail, except in cases for which extension of time is provided, to supply enough properly skilled workmen or proper materials, or if they should fail to make prompt payment(s) to Subcontractors or for material or labor, or persistently disregard laws, ordinances or the instructions of the Engineer, or otherwise be guilty of a substantial violation of any provision of the Contract, then the Owner, upon the certification of the Engineer that sufficient cause exists to justify such action, may without prejudice to any other right or remedy and after giving the Contractor seven (7) days written notice, terminate the employment of the Contractor and take possession of the premises and of all materials, tools and appliances thereon and finish the Work by whatever method the Owner may deem expedient. In such case the Contractor shall not be entitled to receive any further payment until the Work is finished. If the unpaid balance of the Contract price shall exceed the expense of finishing the Work including compensation for additional managerial and administrative services, such excess shall be paid to the Contractor. If such expense shall exceed such unpaid balance, the Contractor shall pay the difference to the Owner. The expense incurred by the Owner as herein provided, and the damage incurred through the Contractor's default, shall be certified by the Engineer.

01196 SCHEDULE AND OWNER'S RIGHT TO TERMINATE

A. Owner and Contractor agree that it is extremely important that Owner, as an irrigation district organized under the laws of the State of California, and serving numerous entities and citizens with water, have the Work completed in time to flow water through its canals. Therefore, in addition to any damages as set forth in Section 01175 of these General Conditions, Contractor shall adhere strictly to the Progress Schedule required to be submitted in accordance with Section 00300, Paragraph 11 of the "Instructions for Bidders", and any failure to do so is agreed to be a material breach of this Contract, and Owner shall be entitled to terminate this Contract without liability to Contractor except for payments due and not then paid, and, further, such failure to strictly adhere to the Progress Schedule is agreed to be a default under the Performance Bond and Payment Bond required pursuant to this Contract, and shall entitle Owner to require the Surety specified in such bonds to pay for the Completion of the Works specified in the Contract in accordance with the terms of said bonds.

CERTIFICATION BY CONTRACTOR

I am aware of the provisions of Section 3700 of the California Labor Code which require every employer to be insured against liability for workers' compensation or to undertake self-insurance in accordance with the provisions of that code, and I will comply with such provisions before commencing the performance of the work of this Contract.

CONTRACTOR: _____

BY: _____

TITLE: _____

ADDRESS: _____

_____

CONTRACTOR'S LICENSE NUMBER: _____

DIR REGISTRATION NUMBER: _____

TELEPHONE NUMBER: _____

- END OF SECTION 01100 -

X:\Project\3000_prj\3818R OID Tunnel 8\Reports\Contract Docs_Specs\DIV 01\01100 General Conditions 20210721.docx

ATTACHMENT A
Public Contract Code 20104

PUBLIC CONTRACT CODE - PCC

DIVISION 2. GENERAL PROVISIONS [1100 - 22355] *(Division 2 enacted by Stats. 1981, Ch. 306.)*

PART 3. CONTRACTING BY LOCAL AGENCIES [20100 - 22178] *(Part 3 added by Stats. 1982, Ch. 465, Sec. 11.)*

CHAPTER 1. Local Agency Public Construction Act [20100 - 20929] *(Chapter 1 added by Stats. 1982, Ch. 465, Sec. 11.)*

ARTICLE 1.5. Resolution of Construction Claims [20104 - 20104.6] *(Article 1.5 added by Stats. 1994, Ch. 726, Sec. 22.)*

20104. (a) (1) This article applies to all public works claims of three hundred seventy-five thousand dollars ($375,000) or less which arise between a contractor and a local agency.

(2) This article shall not apply to any claims resulting from a contract between a contractor and a public agency when the public agency has elected to resolve any disputes pursuant to Article 7.1 (commencing with Section 10240) of Chapter 1 of Part 2.

(b) (1) “Public work” means “public works contract” as defined in Section 1101 but does not include any work or improvement contracted for by the state or the Regents of the University of California.

(2) “Claim” means a separate demand by the contractor for (A) a time extension, (B) payment of money or damages arising from work done by, or on behalf of, the contractor pursuant to the contract for a public work and payment of which is not otherwise expressly provided for or the claimant is not otherwise entitled to, or (C) an amount the payment of which is disputed by the local agency.

(c) The provisions of this article or a summary thereof shall be set forth in the plans or specifications for any work

which may give rise to a claim under this article.

(d) This article applies only to contracts entered into on or after January 1, 1991.

(Amended by Stats. 2010, Ch. 697, Sec. 47. (SB 189) Effective January 1, 2011. Operative July 1, 2012, by Sec. 105 of Ch. 697.)

20104.2. For any claim subject to this article, the following requirements apply:

(a) The claim shall be in writing and include the documents necessary to substantiate the claim. Claims must be filed on or before the date of final payment. Nothing in this subdivision is intended to extend the time limit or supersede notice requirements otherwise provided by contract for the filing of claims.

(b) (1) For claims of less than fifty thousand dollars ($50,000), the local agency shall respond in writing to any written claim within 45 days of receipt of the claim, or may request, in writing, within 30 days of receipt of the claim, any additional documentation supporting the claim or relating to defenses to the claim the local agency may have against the claimant.

(2) If additional information is thereafter required, it shall be requested and provided pursuant to this subdivision, upon mutual agreement of the local agency and the claimant.

(3) The local agency's written response to the claim, as further documented, shall be submitted to the claimant within 15 days after receipt of the further documentation or within a period of time no greater than that taken by the claimant in producing the additional information, whichever is greater.

(c) (1) For claims of over fifty thousand dollars ($50,000) and less than or equal to three hundred seventy-five thousand dollars ($375,000), the local agency shall respond in writing to all written claims within 60 days of receipt of the claim, or may request, in writing, within 30 days of receipt of the claim, any additional documentation supporting the claim or relating to defenses to the claim the local agency may have against the claimant.

(2) If additional information is thereafter required, it shall be requested and provided pursuant to this subdivision, upon mutual agreement of the local agency and the claimant.

(3) The local agency's written response to the claim, as further documented, shall be submitted to the claimant within 30 days after receipt of the further documentation, or within a period of time no greater than that taken by the claimant in producing the additional information or requested documentation, whichever is greater.

(d) If the claimant disputes the local agency's written response, or the local agency fails to respond within the time prescribed, the claimant may so notify the local agency, in writing, either within 15 days of receipt of the local agency's response or within 15 days of the local agency's failure to respond within the time prescribed, respectively,

and demand an informal conference to meet and confer for settlement of the issues in dispute. Upon a demand, the local agency shall schedule a meet and confer conference within 30 days for settlement of the dispute.

(e) Following the meet and confer conference, if the claim or any portion remains in dispute, the claimant may file a claim as provided in Chapter 1 (commencing with Section 900) and Chapter 2 (commencing with Section 910) of Part 3 of Division 3.6 of Title 1 of the Government Code. For purposes of those provisions, the running of the period of time within which a claim must be filed shall be tolled from the time the claimant submits his or her written claim pursuant to subdivision (a) until the time that claim is denied as a result of the meet and confer process, including any period of time utilized by the meet and confer process.

(f) This article does not apply to tort claims and nothing in this article is intended nor shall be construed to change the time periods for filing tort claims or actions specified by Chapter 1 (commencing with Section 900) and Chapter 2 (commencing with Section 910) of Part 3 of Division 3.6 of Title 1 of the Government Code.

(Added by Stats. 1994, Ch. 726, Sec. 22. Effective September 22, 1994.)

20104.4. The following procedures are established for all civil actions filed to resolve claims subject to this article:

(a) Within 60 days, but no earlier than 30 days, following the filing or responsive pleadings, the court shall submit the matter to nonbinding mediation unless waived by mutual stipulation of both parties. The mediation process shall provide for the selection within 15 days by both parties of a disinterested third person as mediator, shall be commenced within 30 days of the submittal, and shall be concluded within 15 days from the commencement of the mediation unless a time requirement is extended upon a good cause showing to the court or by stipulation of both parties. If the parties fail to select a mediator within the 15-day period, any party may petition the court to appoint the mediator.

(b) (1) If the matter remains in dispute, the case shall be submitted to judicial arbitration pursuant to Chapter 2.5 (commencing with Section 1141.10) of Title 3 of Part 3 of the Code of Civil Procedure, notwithstanding Section 1141.11 of that code. The Civil Discovery Act (Title 4 (commencing with Section 2016.010) of Part 4 of the Code of Civil Procedure) shall apply to any proceeding brought under this subdivision consistent with the rules pertaining to judicial arbitration.

(2) Notwithstanding any other provision of law, upon stipulation of the parties, arbitrators appointed for purposes of this article shall be experienced in construction law, and, upon stipulation of the parties, mediators and arbitrators shall be paid necessary and reasonable hourly rates of pay not to exceed their customary rate, and such fees and expenses shall be paid equally by the parties, except in the case of arbitration where the arbitrator, for good cause, determines a different division. In no event shall these fees or expenses be paid by state or county funds.

(3) In addition to Chapter 2.5 (commencing with Section 1141.10) of Title 3 of Part 3 of the Code of Civil Procedure, any party who after receiving an arbitration award requests a trial de novo but does not obtain a more favorable judgment shall, in addition to payment of costs and fees under that chapter, pay the attorney's fees of the other party arising out of the trial de novo.

(c) The court may, upon request by any party, order any witnesses to participate in the mediation or arbitration process.

(Amended by Stats. 2004, Ch. 182, Sec. 54. Effective January 1, 2005. Operative July 1, 2005, by Sec. 64 of Ch. 182.)

20104.6. (a) No local agency shall fail to pay money as to any portion of a claim which is undisputed except as otherwise provided in the contract.

(b) In any suit filed under Section 20104.4, the local agency shall pay interest at the legal rate on any arbitration award or judgment. The interest shall begin to accrue on the date the suit is filed in a court of law.

(Added by Stats. 1994, Ch. 726, Sec. 22. Effective September 22, 1994.)

SECTION 01200

PROJECT MANAGEMENT, ADMINISTRATION AND FACILITIES OPERATION

PART 1 - GENERAL

1.01 SCOPE

A. Work Specified – This Specification section covers the Work necessary to manage and administrate the project. This Section also covers the costs to operate and maintain the facilities and equipment not directly involved with the individual Work activities or items, i.e., the Bid Items. Traditionally, the Contractors refer to this work as the "Project Indirects".

B. Work Inclusions – The Work shall include all management and administrative labor and indirect consumables, equipment, and facilities and incidentals to perform the Work specified in this Section.

1.02 BACKGROUND AND SITE CONDITIONS

A. The Project is anticipated to take approximately three and a half (3.5) months to complete. The Project has many individual Work activities and Bid Items. Some are relatively large in scope and cost, while others are small. Work activities will be located a relatively short distance from the Contractor's Project field office facilities. The cost for "Project Indirects" will not be paid for as a separate line item but should be incorporated into the unit prices in a uniform manner.

1.03 DEFINITIONS

A. Indirect Costs – Project management staff, administrative staff and salaries burdens, and office and equipment operation costs, and indirect equipment, i.e., pick-up trucks and maintenance costs for Project Management, Administration and Facilities Operation.

B. Project Work Duration – November 8, 2021 through February 19, 2022.

C. Planning and Progress Review (PPR) Meeting – A weekly meeting held between the Contractor and the Engineer (and the Owner) to discuss, review plans, coordinate and agree on items of Work relating to the Project, such as design, methods and means, schedules and progress, third party coordination, quality control and testing, safety and contract administration.

D. Request for Information (RFI) – Contractor will submit RFI to Engineer for clarification on issues that arise, Engineer will respond within 10 business days or sooner so as not to impact the time-sensitive schedule.

1.04 SPECIFICATIONS, CODES, STANDARDS AND REPORTS

A. General – Unless otherwise revised, altered, modified or stated in this General Requirements Section or Related Work Specification Sections, the Contractor shall comply to the following Specifications, Codes, Standards and Reports, and their latest published edition:

1. American Society for Testing and Materials (ASTM).

2. California Building Code (CBC), California Code of Regulations, Title 24, Part 2, Volumes 1 and 2, latest edition.

3. State of California, Department of Transportation (Caltrans), Standard Specifications, latest edition.

4. OID Standard Specifications and Drawings.

1.05 RELATED WORK SPECIFICATIONS SECTIONS

01320 Progress and Schedules
02050 Mobilization and Demobilization

PART 2 - PRODUCTS

2.01 CONSTRUCTION MATERIALS

A. Refer to Section 01250 Quality Control and Assurance.

2.02 SUBMITTAL FORMAT AND INSTRUCTIONS

A. Refer to Section 01330 Submittals.

PART 3 - EXECUTION

3.01 MATERIALS PROVIDED

A. The Contractor shall provide site office(s) and staff as needed to perform this Work, including the Resident Engineer/Owner facility. Refer to Section 02050 Mobilization and Demobilization.

B. The Contractor shall provide traffic control devices and signage as needed to facilitate construction traffic at entry/exit points along State Highway 108 and along county roadways. Contractor to determine based on Contractor's logistics whether a flagman (men) is (are) required and include with the base price.

3.02 PLANNING AND PROGRESS REVIEW (PPR) MEETINGS

A. Senior supervisory staff members of the Contractor and its relevant Subcontractors shall attend and be active participants to every weekly PPR meeting.

B. PPR meetings shall be held every week as agreed to by the Contractor, Engineer and Owner in the Resident Engineer's facility.

C. The day previous to agreed meeting day, for the duration of the Work, the Contractor shall submit its agenda items, Look Ahead/Behind Schedule and other relevant documentation to the Resident Engineer and Engineer's Project Coordinator to incorporate into the PPR meeting.

D. The Resident Engineer/Engineer's Project Coordinator is responsible for publishing a weekly agenda, conducting the meeting and publishing the meeting minutes. The Contractor is responsible for providing agenda items and weekly schedules/progresses, bringing relevant supervisory personnel and Subcontractors/Suppliers to the meeting on time, being active participants during the meeting, and reading and commenting on the PPR's meeting minutes.

PART 4 - MEASUREMENT AND PAYMENT

4.01 METHOD OF MEASUREMENT

A. This item not applicable per Article 1.02.

4.02 BASIS OF PAYMENT

A. This item not applicable per Article 1.02.

- END OF SECTION 01200 -

X:\Project\3000_prj\3818R OID Tunnel 8\Reports\Contract Docs_Specs\DIV 01\01200 Project Mgmt Admin Facilities 20210721.docx

SECTION 01250

QUALITY CONTROL AND ASSURANCE

PART 1 - GENERAL

1.01 SCOPE

A. This Section includes the general requirements for quality control and assurance of erection and installation of materials, equipment, systems, and assemblies, and construction of the Contract Work. The requirements specified in this Section are in addition to quality control and assurance requirements specified elsewhere in these Contract Documents.

B. The Contractor shall establish a quality assurance and control program: (a) to insure sufficient supervision, examination; inspection and testing of specified items of Work at appropriate intervals, including those of Subcontractors and suppliers; and (b) to control conformance to the applicable Contract Documents with respect to identified products, workmanship, construction, maintenance while idle, finish and functional performance. At a minimum, Contractor's quality control program shall include checking, approval and coordination of submittal and oversight of specified tests; and it shall specifically assign to the Contractor personnel the obligation to notify the Engineer to verify and inspect when items of Work are completed that cannot be later located or inspected without uncovering Work. Contractor shall accurately annotate data on the record documents.

1.02 BACKGROUND AND SITE CONDITIONS

A. The Project has a wide range of tasks that shall be completed within a limited time frame of approximately three and a half (3.5) months during the winter season. In addition, some work activities may be located at relatively long distances from the Contractor's Project field office facilities, lending to possible difficulties in supply, and communication issues. These factors have numerous unknowns that must be accounted for. To account for these unknowns and to limit their impact on the final project completion, strict measures of quality assurance and quality control shall be implemented. Field technicians, provided by the Engineer and paid by the Owner, will use field quality control methods to verify adequate quality in the Work. Contract Documents will be issued to the Contractor describing dimensions and workmanship for the installation and manufacturer of the Work. High standards shall be set by the Contractor, and all codes must be met or exceeded by the Contractor to ensure that the Work is successfully completed.

1.03 DEFINITIONS

A. Independent Materials Testing Laboratory – Materials testing laboratory which is not owned and/or operated by the Contractor, employer, or one of Contractor's Subcontractors performing related Work. The laboratory shall be certified in accordance with ASTM C1077 (Standard Practice for Laboratories Testing Concrete and Concrete Aggregates for use in Construction and Criteria for Laboratory Evaluation) and ASTM E329 (Standard Specification for Agencies Engaged in the Testing and/or Inspection of Materials used in Construction). Test work performed in the field and at the laboratory by the Independent Laboratory personnel shall be borne by the Contractor unless approved otherwise in writing in advance of the testing by the Owner.

B. Engineer's Materials Testing Laboratory – Either of two, Condor's laboratories, which have been certified in accordance with ASTM C1077 (Standard Practice for Laboratories Testing Concrete and Concrete Aggregates for use in Construction and Criteria for Laboratory Evaluation) and ASTM E329 (Standard Specification for Agencies Engaged in the Testing and/or Inspection of Materials used in Construction). The Engineer's laboratory is considered "independent" and has the following capabilities: shotcrete, concrete, grout aggregates, soils and rock testing.

C. Quality Assurance – Program for systematic monitoring and evaluation of the various aspects of a project, service or facility to ensure that standards of quality are being met.

D. Quality Control – Maintenance of proper standards by regular inspection of the product within a laboratory or controlled environment. Aggregate of activities (as design analysis and inspection for defects) designed to ensure adequate quality, especially, in the Work.

E. Field Quality Control – Maintenance of proper standards by a certified inspector away from a laboratory or controlled environment of the Work.

F. Code – Comprehensive and systematically arranged body of rules, standards, and conduct or procedures that dictate the way a product or the Work is manufactured, inspected, installed and/or performed.

G. Specifications – A statement of particulars, describing materials dimensions and workmanship for the construction, installation and/or manufacture of the Work.

H. Standards – Process or protocol for manufacture, installation, or construction of a product or the Work, accepted as a basis for comparison.

I. Reports – Detailed and formal account of findings.

J. Specialty Subcontractor – Business firm contracted to perform part of another's entire contract that specializes in a certain task(s) or procedure(s).

K. Major Supplier – As listed and defined in Contract Specifications Section 00540 and General Requirements Section 01100, Article 01177.

L. Contractor Design Tests – Tests required by the Contract Documents for the Contractor to perform to develop his design products, mixes, etc. to meet the contract technical specifications. The tests are performed by an independent materials testing laboratory.

1.04 SPECIFICATIONS, CODES, STANDARDS AND REPORTS

A. General – Unless otherwise revised, altered, modified or stated in this Specification Section or Related Work Specification Sections, the Contractor shall comply to the following Specifications, Codes, Standards and Reports, and their latest published edition:

1. American Society of Testing and Materials (ASTM).

   a. C1077 – Standard Practice for laboratory testing concrete and concrete aggregates for use in construction and criteria for laboratory evaluation.

   b. E329 – Standard Specification for agencies engaged in testing and/or inspection of materials used in construction.

2. California Building Code (CBC), California Code of Regulations, Title 24, Part 2, Volumes 1 and 2, latest edition.

3. State of California, Department of Transportation (Caltrans), Standard Specifications, latest edition.

4. OID Standard Specifications and Drawings.

5. California Code Regulations, Title 8, Chapter 4, Division of Industrial Safety (Cal OSHA), Subchapter 4 – Construction Safety Orders.

1.05 RELATED SPECIFICATION SECTIONS

01200 Project Management, Administration and Facilities Operation
01330 Submittals

1.06 QUALITY CONTROL AND ASSURANCE REQUIREMENTS

A. The Contractor shall provide a Quality Assurance Supervisor for the Work. This person may have other collateral duties on the Project. This person shall have a background of administrative and engineering capabilities. This person shall have direct access to the Contractor's president and/or a corporate officer with the Contractor's company or joint venture, preferably to the Quality Assurance and Control Corporate Officer.

B. The Contractor shall have its Quality Control and Assurance Work Plan readily available on site.

C. Quality Control and Assurance Work Plans shall be required of specialty Subcontractor and major suppliers. Their plans shall flow smoothly and seamless into the Contractors Work Plan.

1.07 CONTRACTOR SUBMITTALS

A. Pre-Construction

1. The Contractor shall submit the qualifications of its Quality Control and Assurance Supervisor designated for this Work, for "review-and-acceptance" by the Engineer.

2. Submit the name and direct contact information, i.e., postal mail address, voice telephone number, facsimile number and email address, for Contractor's Corporate Quality Control and Assurance Office to the Engineer for "review-and-information."

3. Submit the Contractor's Quality Control and Assurance Work Plan for "review-and-acceptance".

   a. Provide an acceptance method and means to track non-conformance Work deficiencies to their abatement issued by the Contractor, the Engineer and third parties.

4. Submit to the Engineer for review and possible comment all instructions issued by the manufacturers for all products to be incorporated into the permanent Work.

B. Construction

1. Submit non-conformance reports and abatements.

   a. Provide a listing of abated and outstanding non-conformances every week prior to the Planning and Progress Review (PPR) meeting.

2. The Contractor shall submit as-built Contract Drawings and Shop Drawings for "review-and-edit" by the Engineer.

C. Close-Out

1. The Contractor shall submit a final set of as-built Contract and Shop Drawings of all known changes, deviations, additional information and locations, etc., for the Engineer's "review-and-acceptance."

1.08 SPECIAL CONDITIONS AND REQUIREMENTS

A. Inspection and Testing Laboratory Services

1. The Owner has chosen to employ the Engineer's Materials Testing Laboratory to perform inspections and testing required by the Engineer to ensure that Work meets the requirements of the Contract.

2. Costs for tests beyond the capability of Engineer's Materials Testing Laboratory required by the Contract Documents will be reimbursed by Owner upon approval of invoices from the testing firm selected by the Engineer.

3. The Contractor shall bear the cost of any tests specified as Contractor design and/or performance tests and non-conformance re-testing as required.

B. Critical Specialty Qualifications, Subcontractors and Suppliers

1. Shotcrete Applicator

a. The Contractor shall submit the qualifications for its Shotcrete Applicator designated for this Work, for "review-and-acceptance" by the Engineer.

2. Concrete and Shotcrete Ready-Mix Supplier(s)

a. The Contractor shall submit the qualifications for its concrete and shotcrete ready-mix supplier(s) designated for this Work, for "review-and-acceptance" by the Engineer.

3. Ground reinforcement installer

a. The Contractor shall submit the qualifications for its ground reinforcement installer designated for this Work, for "review-and-acceptance" by the Engineer.

PART 2 - PRODUCTS

NOT USED

PART 3 - EXECUTION

3.01 GENERAL

A. The Contractor and its Subcontractors and Suppliers shall provide and maintain quality-control program(s), regulation methods, procedures and processes to ensure compliance with standards of quality required by the Contract Documents. The Contractor shall submit to the Engineer description(s) of the quality control program(s).

B. Submittals are required for all items in each category, even those which the Contractor intends to furnish or fabricate as shown on the Contract and/or Shop Drawings to confirm compliance with the designs.

C. The Contractor shall obtain field measurements required for the accurate fabrication and installation of the Work included in this Contract. Exact measurements are the Contractor's responsibility.

D. The Contractor shall also furnish or obtain templates, patterns and setting instructions as required for the installation of the Work. Dimensions shall be verified in the field.

E. Unless otherwise indicated or specified in the Technical Specifications, manufactured materials, products, installed or applied shall be in accordance with the manufacturer's instructions, directions and/or specifications. The installation or application shall be in accordance with printed instructions furnished by the manufacturer of the material considered for use under conditions similar to those at the Project Site. The Contractor shall furnish instruction to the Engineer for "review-and-acceptance" before Work is begun.

F. Any deviation from the Contract Documents and/or the Manufacturer's printed recommendations shall be explained and acknowledged as correct and appropriate for the circumstances in writing by the particular manufacturer.

G. The Contractor will be held responsible for installations contrary to the manufacturer's recommendations.

H. Shop and Field Work shall be performed by mechanics, craftsmen, and workers skilled and experienced in the fabrication and installation of the work involved.

I. The Work for this Contract shall be performed in accordance with the best accepted practices of the various trades involved and in accordance with these Contract Documents and "reviewed and accepted" Shop Drawings.

J. The Work shall be erected and installed plumb, level, square and true, or true to indicated angle, and/or in proper alignment and relationship to the work of other trades. Finished work shall be free from defects and damage.

K. The Engineer reserves the right to reject material and Work quality that are not considered to be up to acceptable industry standards of the various trades involved. Such inferior material or Work quality shall be repaired or replaced, as directed, at no additional cost to the Owner.

3.02 INSPECTIONS, TESTS AND FIELD QUALITY CONTROL

A. The Owner, Engineer and/or other Owner/Engineer designated inspection and testing agency may perform inspections, tests and other services at its discretion.

B. The Engineer will report observations and results of tests indicating compliance or non-compliance with Contract Documents to the Contractor, to the Owner and to the Agency and/or third party which owns and/or governs within the Project Site.

C. Contractor shall cooperate with Engineer in furnishing samples of materials, design mix(es), equipment, tools, storage and other assistance as requested.

D. Testing and inspection of the Work required by the Contract Documents shall be arranged by the Engineer and paid for by the Owner, unless specifically indicated otherwise on the Contract Documents.

E. Special inspections to be performed by the Engineer as specified in the Contract Documents, or, as required, to comply with a code or other agency having jurisdiction shall be performed at the Owner's expense. Contractor shall give the Engineer, the Engineer's Materials Testing Laboratory and special inspectors a minimum of two (2) workdays notice, excluding weekends and holidays, of when and where such special inspections are required, in order for the Engineer to arrange for the appropriate inspectors and observers be present to perform the necessary inspections or tests.

F. The Engineer reserves the right to modify the scope of, or to reassign any of the testing and inspection services specified in the various sections of the Contract Documents to be performed by a testing agency or consultant retained by the Engineer and/or Owner in connection with the Work.

G. If the public authorities having jurisdiction determine that portions of the Work require additional testing, inspection or approval not included in Article A above, the Engineer will order the performance of such services by qualified independent

testing agencies or consultants as may reasonably be required. The Owner shall bear such costs, except as otherwise provided in Article H below.

H. If such procedures for testing, inspection or approval reveal failure of the portion of the Work to comply with requirements of the Contract Documents, Contractor shall bear all costs made necessary by such failure including costs of repeated procedures and compensation for the Owner's/Engineer's testing and inspection services and expenses.

1. If the Engineer's observation of any inspection or testing undertaken pursuant to this Article 3.02 reveals a failure in any one of a number of identical or similar items or elements incorporated in the Work to comply: (i) with the requirements of the Contract Documents or (ii) with laws, ordinances, rules, regulations, or orders of any public authority having jurisdiction with respect to the performance of the Work, then the Engineer will have the authority to order inspection and testing of all such items or elements of the Work, or of a representative number of such items or elements of the Work, as it may consider necessary or advisable.

2. Contractor shall bear all costs thereof, including reimbursement to the Owner for the Owner's/Engineer's additional testing and inspection services if any are required, made necessary thereby. However, neither the Engineer's authority to act under General Requirements Section 01100, Article 01180, nor any decision made by the Engineer in good faith either to exercise or not to exercise such authority, shall give rise to any duty or responsibility of the Engineer and/or Owner to Contractor, any Subcontractor, or any of their agents or employees, or any other person performing any of the Work.

I. Neither observation by the Engineer nor inspections, tests or acceptance by the Engineer's inspectors or testing agencies and consultants shall relieve Contractor from Contractor's obligation to perform and provide quality control services to assure that the Work conforms to the requirements of the Contract Documents.

J. Unless otherwise required by the Contract Documents, required certificates of testing, inspection or approval shall be secured by Contractor and furnished to the Engineer in accordance with the Contract Documents.

K. If observation or testing is required outside Stanislaus County the Contractor shall bear the travel-related costs, including transportation, lodging, meals, long-distance telephone calls, and associated expenses occurred by the Engineer.

L. The Contractor shall provide promptly all facilities, labor, and material reasonably needed for performing such safe and convenient inspection and test as may be required by the Engineer. Tests or inspections conducted pursuant to the Contract Documents will be made promptly to avoid unreasonable delay in the Work.

M. The Owner reserves the right to charge the Contractor any additional cost of inspection or test when the Work, material or workmanship is not ready for inspection at the specified time.

3.03 UNCOVERING OF WORK

A. No Work shall be covered until inspected by the Engineer.

B. If part of the Work is covered prior to the Engineer's inspection, Contractor shall uncover it for the Engineer's observation and subsequently replace it at no additional cost to the Owner and without change in the Contract Duration.

C. Should the Engineer and/or the Owner wish to re-inspect a portion of the Work that has been covered, Contractor shall uncover it on request. If the Work conforms to the requirements of the Contract Documents, the Owner will pay the costs of uncovering and replacement. If the Work does not conform to the requirements of the Contract Documents, Contractor shall pay said costs, including related disruptions and delays.

3.04 CORRECTION OF NON-CONFORMING WORK

A. Upon receipt of written notification from the Engineer, Non-Conforming Work shall be removed from the Project Site and replaced promptly by the Contractor with Work that conforms to the Contract Documents, regardless of when the Non-Conformance is determined. Contractor shall pay all claims, costs, losses, and damages, including the Owner's and/or Engineer's expenses at the labor rates included in the contracts between the Owner and the Owner's and/or Engineer's testing and inspection services, of removal and replacement including but not limited to all costs of repair or replacement of Work of others.

B. If Contractor fails to correct Non-Conforming Work or to proceed with corrections within five (5) days of the date of written notification from the Engineer, the Owner may correct the Non-Conforming Work in accordance with General Requirements Section 01100, Article 01162, or may remove it and store the salvageable materials or equipment at Contractor's expense. If Contractor does not pay the costs of such removal and storage within seven (7) days after written notice, the Owner may sell, auction, or discard such materials and equipment. The Owner will credit Contractor's account for the excess proceeds of such sale, if any. The Owner will deduct from Contractor's account the costs of damages to the Work, rectifying the Non-conforming Work, removing and storing such salvageable materials and equipment, and discarding the materials and equipment, if any. If the proceeds fail to cover said costs and damages, the Contract Sum shall be reduced by the deficit. If the current Contract unpaid balance and retention is insufficient to cover such amount, Contractor shall reimburse the Owner.

C. Contractor shall repair or replace Non-Conforming Work or damage resulting from such Non-Conforming Work promptly at no additional cost to the Owner, whether due to: (i) faulty materials or workmanship; or (ii) defective installation by Contractor of materials or equipment manufactured by others; or (iii) disturbance of, or damage to, Owner or Third Party improvements by Contractor's operations contrary to the Contract Documents; or (iv) other failure to conform to the requirements of the Contract Documents. Such repair or replacement shall commence within five (5) days of the date of the Engineer's written notification of occurrence of such Non-Conforming Work and shall forthwith be diligently prosecuted to completion during the following correction periods, or such longer period of time as may be prescribed by laws and regulations or by the terms of any applicable guarantees required elsewhere in the Contract Documents, as applicable:

1. Any time during construction of the Work; or

2. One (1) year following the date of the Notice of Final Completion for Non-Conforming Work or damage resulting therefrom in any part of the surface Work or in surface improvements of the Owner such as building superstructures, pavements, curbs, walks, tracks, walls, stairways, poles, mechanical and electrical equipment, materials, appurtenances and accessories, or other surface structures; or

3. Two (2) years following the date of the Notice of Final Completion for Non-Conforming Work or damage resulting therefrom in any part of subsurface Work or in subsurface improvements of the Owner not included in the Work, such as building foundations, sewers, side sewers, culverts, other drainage structures, pipes, valves, conduits, conductors, or other subsurface structures.

D. This requirement to correct Non-Conforming Work shall continue until one (1) year after the date of correction of repaired or replaced Items.

E. This requirement to correct Non-Conforming Work and all similar requirements applicable to equipment of Subcontractors or Suppliers used in or as a part of the Work (whether on equipment of the nature above specified or otherwise) shall inure to the benefit of the Owner without necessity of separate transfer or assignment thereof.

F. The remedies provided for in this Article 3.04 shall not be restrictive but shall be cumulative and shall be in addition to all other legal remedies the Owner may possess with respect to latent defects or frauds.

G. If, in the judgment of the Engineer, replacement of any defective or Non-Conforming Work is undesirable or impractical, the Contract Bid shall be reduced by such amount as the Owner or its authorized representatives deem equitable, or Contractor shall rebate moneys previously paid by the Owner be taken as the basis

of claims for Extra-Work. The Contractor shall have no claim for damages or extension of time due to any delay resulting from making required revisions to Contract Documents and/or to Shop Drawings. The review of these drawing(s) by the Engineer shall apply to general design only and shall in no way relieve the Contractor of responsibility for errors or omissions contained therein nor shall such review operate to waive or modify any provision or requirement contained in these Contract Specifications or on the Contract Drawings. The Engineer's notation shall be included in the "As-Built" Contract and/or Shop Drawings.

PART 4 - MEASUREMENT AND PAYMENT

4.01 METHOD OF MEASUREMENT

A. Aspects in this Section 01250 Quality and Control Assurance will not be measured for payment. The work required in this Section shall be considered incidental to Section 01200 Project Management, Administration and Facilities Operation and other technical specifications.

4.02 BASIS OF PAYMENT

A. The Contractor shall be paid for Quality Control and Assurance Administration and Technical Specialization Quality Control under Section 01200 Project Management, Administration and Facilities Operation and the associated Technical Specification Sections, respectively.

- END OF SECTION 01250 -

X:\Project\3000_prj\3818R OID Tunnel 8\Reports\Contract Docs_Specs\DIV 01\01250 Quality Control 20210721.docx

SECTION 01320

PROGRESS AND SCHEDULES

PART 1 - GENERAL

1.01 SCOPE

A. This Specification Section describes the requirements and procedures for preparing, revising and reviewing the Contractor's construction schedules used for planning, managing and following construction activities. The schedules provide a basis for determining the progress status of the project relative to the completion time, specific dates and for determining the acceptability of the Contractor's progress payment estimates.

1.02 BACKGROUND AND SITE CONDITIONS

A. The South Main Irrigation Canal can only be shut down during the winter months when irrigation is not required by the consumers within the Oakdale Irrigation District. The normal shutdown period for the canal is from November 1 to February 28. The rehabilitation work in the tunnel must be done during the canal's shut down period of 2021 – 2022 winter season.

1.03 DEFINITIONS

A. Critical Path Method (CPM) – A CPM schedule is a planning technique based on network flow theory and is specifically used for well-defined projects. It is based on a fixed schedule determined for each activity and based on realistic time estimates, which are the result of experience. A CPM flow network shall then be derived from the actual performance of the task or activity.

B. Program Evaluation and Review Technique (PERT) – A PERT schedule is a planning technique based on network flow theory. PERT is specifically used for massive programs with hard-to-define objectives and overlapping responsibility divided among many organizations. PERT projects also could involve wide geographic dispersal and a large degree of time and cost uncertainty. A PERT schedule is established based on the probability of finishing the work within a certain period of time. The PERT flow network shall then be derived from the occurrences of events.

C. Float – Float is the total amount of delay that the activity may experience and still not become critical.

D. Contract Float – If the schedule anticipates early completion of all or any part of the Work, Contract Float is the number of calendar days between Contractor's anticipated date for early completion of all or any such part of the Work and the corresponding specified Contract Time.

B. Total Float – Number of calendar days by which the Work or any part of the Work may be delayed without necessarily extending a pertinent Contract Time. Total Float is by definition at least equal to Contract Float.

C. Business Day – Any day except Saturdays, Sundays and Holidays observed by the Owner and/or the Engineer.

D. Calendar Day (CalDay) – Every day shown on the calendar, including Saturdays, Sundays and Holidays.

E. Day – Same as Work Day.

F. Critical Path – The sequence of work activities and events in series taking the longest time to complete. Each work activity must be complete before the next activity can start. The critical path has no float.

G. Holidays – The recognized Holidays and their periods for this Project are as follows:

Holiday	Period	Days
Veterans Day	NOV 11, 2021	THU
Thanksgiving	NOV 25 – NOV 28, 2021	THU through SUN
Christmas	DEC 24 – 25, 2021	FRI through SUN
New Year's	DEC 31 – JAN 1, 2022	FRI through SUN
Martin Luther King, Jr.	JAN 17, 2022	SAT through MON
Presidents	FEB 21, 2022	SAT through MON

The Engineer takes Holiday periods as Holidays or leave (vacation) as listed in this Article, except for Veterans Day and Martin Luther King, Jr. weekend. The Contractor may work those exception days, except Sundays, without backchargeable inspection. If the Contractor wishes to perform "production-type" Work on Engineer non-working days, the Contractor shall be backcharged according to the attached schedules for additional services and inspections (Attachment A following the end of this Section).

H. Baseline Schedule – A computer generated schedule using common scheduling software, i.e., Primavera, with Microsoft® Windows ™ operating software, or a manually produced schedule, based on CPM and showing Critical Path.

I. Updated Schedule – A schedule and progress up to date, using the same method as the Baseline Schedule. The Contractor submits the monthly Updated Schedule

showing progress to date and the future schedule duration activities and logic links. This schedule is for the Engineer's "review-and-comment."

J. Look Ahead/Behind Schedule – A bar chart schedule manual or computer generated showing past Work performed for one (1) week back and showing future Work activities which are to be continued or started for the next two (2) weeks ahead. The schedule is submitted every week until the Project is complete. This schedule is for the Engineer's "review only."

K. Work Day – Normal working hours shall be between the hours of 6:00 a.m. and 6:00 p.m., Monday through Saturday, excluding Holidays. Any days anticipated to require extended work hours or Sunday/Holiday work shall be clearly shown on the Baseline and Updated Schedules, and shall, at a minimum, be submitted to the Engineer for "review-and-acceptance" at least one (1) week in advance. If unanticipated extended work hours are required, the Engineer shall be notified immediately. No work shall be allowed during hours of darkness without proper lighting.

L. Substantial Completion – Occurs on a date when all the Contract Work inside and outside the tunnel and canal is finished, and all debris and obstructions are removed from the conveyance structures, and the Owner can release irrigation water into the South Main Canal.

M. Final Completion – Final Completion occurs on a date when the Contractor has finished all of the Contract Work outside the canal satisfactory to the Engineer and the Owner, has completely demobilized from the Project Site(s), has completed all the contractual documentation, and has signed the final Change Order to the Contract.

1.04 CONTRACTOR SUBMITTALS

A. Pre-Construction

1. Within three (3) days of Contract Award the Contractor shall submit a Baseline Schedule for "review" by the Engineer and the Owner.

2. Within three (3) days of receipt the Engineer shall return the Contractor's Baseline Schedule with a request for corrections or adjustments.

B. Construction

1. At the end of each month or on each monthly date set by the Engineer until Substantial Completion the Contractor shall submit an Updated Schedule for "review-and-comment" by the Engineer.

2. The Contractor shall submit a Look Ahead/Behind Schedule to the Engineer on a weekly basis.

PART 2 - PRODUCTS

2.01 PROGRESS/SCHEDULE COMPUTER PROGRAM

A. The Contractor shall provide copies of the baseline schedule and updated schedule(s) in PDF format or provide software and software licenses to the Engineer as needed to view the schedules in the format provided.

PART 3 - EXECUTION

3.01 SCHEDULES

A. Baseline Schedule

1. The Contractor shall prepare a Baseline Schedule. The schedule shall depict all significant construction activities including mobilization, critical submittals, key construction milestones, demobilization and cleanup. The schedule shall include all items of Work, as a minimum, listed on the Contract Bid Schedule descriptions and, if "submitted, and review-and-accepted", a Contractor's Schedule of Values.

2. Substantial Completion Time and Date is 6:00 p.m., February 19, 2022. Final Completion Date is projected to be March 31, 2022. Both milestones and dates shall be shown on the Baseline Schedule and Updated Schedules. The dependencies between activities shall be indicated so that it may be established what effect the progress of any one activity has on the schedule. Changes to the anticipated Substantial and Final Completion dates shall be noted and explained.

3. The Baseline Schedule shall be presented to all attendees at the Preconstruction Meeting.

4. The Baseline and Updated Schedules shall be represented in Work Days for activity durations and in Calendar Days along the X axis depiction.

5. Key events and milestones shall be shown on the Baseline and Update Schedule(s). The following, as a minimum, shall be shown as key events and milestones:

Description	Date
Notice-of-Award	OCT 5, 2021

Notice-to-Proceed	OCT 18, 2021
Contractor Mobilization Start	By Contractor
Canal irrigation water shut down	NOV 1, 2021
Start Construction	Not before NOV 8, 2021
All holiday periods	Previously stated
Substantial Completion	FEB 19, 2022
Demobilization Start	By Contractor
Canal water release	MAR 1, 2022
Final Completion	MAR 31, 2022

B. Updated Schedules

1. The Contractor shall prepare Updated Schedules from the "review-and-accepted" Baseline Schedule.

2. The Updated Schedules shall be revised schedules showing construction activities progress, work days ahead or behind the Baseline Schedule, and milestone and completion dates, whether they have changed or not. The Updated Schedules shall show and indicate any duration changes in Work Days.

3. The Updated Schedules shall be submitted on a monthly basis prior to the end of each month, unless mutually agreed upon by the Engineer and the Contractor.

C. Narrative accompanying Baseline and Update(s) Schedules.

D. Look Ahead/Behind Schedule

1. The Contractor shall prepare a simple bar graph manually, computer assisted or computer generated schedule each week.

2. The Look Ahead/Behind Schedule shall show planned, scheduled activities projected at least two (2) weeks ahead and show progress of activities, completed and started but not finished, at least one (1) week behind. The division separating ahead and behind Work activities shall be at the end of Production Work one (1) day prior to the Progress and Planning Review (PPR) meeting day for that week.

3. The Contractor shall submit the Look Ahead/Behind Schedule each week and at least twenty-four (24) hours before the PPR meetings.

PART 4 - MEASUREMENT AND PAYMENT

4.01 METHOD OF MEASUREMENT

A. Schedules shall not be measured for payment.

4.02 BASIS OF PAYMENT

A. The time-and-materials to produce project schedules shall be considered incidental to Section 01200 Project Management, Administration and Facilities Operation.

- END OF SECTION 01320 -

X:\Project\3000_prj\3818R OID Tunnel 8\Reports\Contract Docs_Specs\DIV 01\01320 Progress and Schedules 20210721.docx

ATTACHMENT A
Engineer's Schedule of Fees

CONDOR EARTH
PREVAILING WAGE SCHEDULE OF FEES
2021

STAFF MEMBER	RATE PER HOUR ($)
PRINCIPALS/PROJECT MANAGEMENT	
Senior Principal	245.00
Principal Tunneling Consultant	235.00
Principal Engineer/Geologist	219.00
Project Director	209.00
Construction Manager	204.00
Project/Senior Manager	184.00
TECHNICAL	
Senior Geotechnical Engineer	209.00
Certified Hydrogeologist/Engineering Geologist	199.00
Senior Geologist/Engineer/Environmental Specialist	189.00
Unmanned Aerial System (UAS) Specialist	153.00
Resident Construction Inspector	153.00
Associate Geologist/Engineer/Environmental Specialist	153.00
Staff Geologist/Engineer/Environmental Specialist	138.00
Field Environmental Specialist (Group 2)	136.00
Engineering Assistant	112.00
Draftsperson	102.00
MATERIALS TESTING*	
Material Technician (Group 1)	143.00
Material Technician (Group 2)	138.00
Material Technician (Group 3)	133.00
Material Technician (Group 4)	128.00
MTSI Project/Laboratory Manager	128.00
Senior Materials Technician (non-PW)	97.00
SUPPORT STAFF	
Senior Project Administrator	133.00
Administrative Specialist	107.00
Project Coordinator	107.00
Technical Editor	79.00
Administrative Assistant	73.00
MISCELLANEOUS	
Overtime (all Saturday work is overtime)	(1.3 times rate)
Double-time (all Sundays and Holidays)	(1.7 times rate)
Shift Pay** (Night Shift)	(1.3 – 1.7 times rate)
Litigation Support	300.00 – 400.00

NON-LABOR CHARGES

Vehicle charge ..... $55 per day plus 50 cents per mile

Laboratory Charges per Laboratory Fee Schedule. Billable Field Equipment per Billable Field Equipment Schedule.

*A 2-hour minimum charge will be applied to all field services, and a 4-hour minimum will be applied for the cancellation of work within 24 hours of scheduled field work.

OUT-OF-POCKET EXPENSES

Billed at cost plus 15% and includes such items as travel expenses, equipment rental, laboratory fees, subcontractors, postage and freight, subcontracted printing or reproduction fees, supplies, etc.

CALIFORNIA DEPARTMENT OF INDUSTRIAL RELATIONS GROUP CLASSIFICATIONS

Group 1	Group 2	Group 3	Group 4
ASNT Level II-III	AWS-CWI	Geotechnical Driller	ACI
DSA Masonry	ICC Certified Structural Inspector	Soils/Asphalt	Drillers Helper
DSA Shotcrete	NICET Level III	Earthwork Grading	ICC Fireproofing
Lead Inspector	Shear Wall/Floor System Inspector	Excavation and Backfill	Proofload Testing
NICET Level IV	Building/Construction Inspector	NICET Level II	Torque Testing
NDT Level Two			NDT Level One

**Shift Pay: A night shift is a shift which commences after 2:00 p.m. or before 4:00 a.m. during any twenty-four (24) hour period commencing at 12:01 a.m.

CONDOR

SECTION 01330

SUBMITTALS

PART 1 - GENERAL

1.01 SCOPE

A. The Work specified in this Section summarizes requirements and procedures for submitting documents for "review-and-acceptance" by the Engineer.

1.02 RELATED WORK SPECIFICATIONS

01320 Progress and Schedules

1.03 SPECIFICATIONS, CODES, STANDARDS AND REPORTS

A. General – Unless otherwise revised, altered, modified or stated in this Specification Section or Related Work Specification Sections, the Contractor shall comply to the following Specifications, Codes, Standards and Reports, and their latest published edition:

1. American Society for Testing and Materials (ASTM)

2. California Building Code (CBC), California Code of Regulations, Title 24, Part 2, Volumes 1 and 2, latest edition

3. State of California, Department of Transportation (Caltrans), Standard Specifications, latest edition

4. OID Standard Specifications and Drawings

1.04 DEFINITIONS

A. Shop Drawings – Fabrication or layout drawings required by individual Specification Section(s) for permanent incorporation in the Work and to be placed and/or in the as-built Contract Drawings.

B. Working Sketches – The Contractor's plan Drawings for temporary equipment or structures such as decking, temporary bulkheads, support of excavation, support of utilities, ground water control, and forming and false work; and for such other work as may be required for construction, but do not become an integral part of permanent Work. Working Sketches may require a Professional Engineer to sign and seal associated calculations and the sketch(es), as required by the Technical

Specification Sections of the Contract Documents for temporary work which will not become a part of permanent structures included in this Contract.

C. Work Plans – A narrative with or without Working Sketches that discusses the Contractor's procedures, methods and means, and products to execute and complete the Work.

D. Samples – Samples of materials or equipment submitted to Engineer and/or Owner for "review-and-acceptance," prior to incorporating the item in the Work as required by individual Specification Sections.

E. Certification – As identified in each section, certificates or certified test results submitted which demonstrates proof of compliance with Specifications for products, materials, equipment, systems, and qualifications of personnel, manufacturers, fabricators and installers.

F. Calculations – Where required by individual Specifications Sections, signed and sealed by a specific branch Professional Engineer registered in the State of California.

G. Test Procedures and Reports – Test procedures for "review-and-acceptance" by the Engineer before commencement of testing. Test reports shall be in a format for "review-and-record only" by the Engineer.

H. Documentation – Documents required to be submitted by the Specifications, including miscellaneous items such as delivery tickets, batch tickets and bills of materials for "record only."

I. Product Data – Manufacturer's literature, catalog cuts, and Material Safety Data Sheets submitted for "review-and-acceptance" by the Engineer.

J. Operations and Maintenance Manuals – Operations and maintenance manuals for equipment and systems, as required by the Specifications for the Engineer to "review-and-deposition" and for the Owner to keep.

K. Construction Schedules – Refer to Specification Section 01320 Progress and Schedules.

L. Substitution – Approved substitution is an item of the Work which include methods and means of construction, products, supplies materials, and equipment which are specified in the Contract Documents. The Contractor has requested a change in writing. The Engineer has "reviewed-and-accepted" the item substitution in writing.

M. Changes – Changes proposed by the Contractor to items listed in the Contract Documents and/or in the Contractor's submittal(s) after "review-and-acceptance"

will not be permitted unless those changes have been "submitted, reviewed-and-accepted" in writing by the Engineer.

N. Equals – When the Contract Documents state, "or equal," the Contractor may submit a product which is equal to the product(s) specified for "review-and-acceptance" by the Engineer.

1.05 QUALITY CONTROL AND ASSURANCE REQUIREMENTS

A. Prepare Shop Drawings, Working Sketches and record documents to acceptable industry standard of quality.

PART 2 - PRODUCTS

2.01 MASTER LIST OF SUBMITTALS

A. Identify submittals required and determine the date on which each submittal is required in conformance with "reviewed-and-accepted" schedules. Within ten (10) days after the effective date of Notice-to-Proceed, furnish a master list of submittals required by the Contract Documents, with corresponding submittal dates which match the dates listed in the detailed Contract Schedule to be "reviewed-and-accepted" by the Engineer. Allow no less than ten (10)-day cycles for review of each submittal by the Engineer. Note: the individual specification sections may indicate longer lead time for the "review-and-acceptance" by the Engineer before Work may begin. The Contractor shall not start Work on items until required submittals are "reviewed-and-accepted" by the Engineer unless otherwise "accepted" by the Engineer. The Contractor's key and critical submittals for composition and "review-and-accept" shall be placed on the Contractor's Baseline Schedule.

2.02 SUBMITTAL FORMAT AND INSTRUCTIONS

A. Shop Drawings and Working Sketches to show the following information:

1. Title block.

2. Drawing title, date and revision dates, scale and consecutive drawing numbers.

3. Contract title and number.

B. Submittals to show the following information when applicable:

1. Cover sheet with a title.

2. Names of Contractor, Subcontractors, Suppliers, Manufacturers and, when applicable, the seal and signature of an engineer, currently registered in the State of California, for the discipline involved.

3. Identification of product by either description, model number, style number, serial number or lot number, and finish numbers.

4. Subject identification by Contract Drawing and/or Specification reference.

5. Relation to adjacent structures or materials.

6. Field dimensions, clearly identified as such.

7. Applicable standards, such as ASTM or Federal Specification numbers.

8. Identification of deviations from the Contract Documents.

9. On cover page, Contractor's stamp, signed and dated, certifying:

    a. Review of submittals for compliance with the Contract Documents.

    b. Verification of field measurements.

    c. Verification of Subcontractor's work for accuracy.

    d. Statement that submittal does not or does deviate from Contract Documents.

C. Make submittals sufficiently in advance so "review-and-acceptance" may be made by the Engineer at least ten (10) calendar days before commencement (includes subsequent submittals) of Work and Related Work.

D. Allow five (5) calendar days of each resubmittal for "review-and-acceptance" by the Engineer.

E. Ship submittals prepaid, email or hand carry to the Engineer.

F. Accompany submittals and Drawings with a Contractor Transmittal Form containing the following information:

1. Contractor's name, address, telephone number for home office or field office.

2. Transmittal date sent by Contractor and "blank" for date received by the Engineer.

3. Submittal number based on individual Specification Section number.

4. Contract title and number.

5. Supplier's, Manufacturer's and/or Subcontractor's name, address and telephone number.

6. Subject identification.

7. Copy of Subcontractor's or Supplier's transmittal to Contractor.

G. Provide sufficient data with subsequent submittals initiated by the Contractor for consideration of corrective procedures for review. Make subsequent submittals in the same manner as initial submittals.

H. Incomplete or partial submittals will be returned to the Contractor without review.

I. Illegible facsimile copies of any portion of a submittal may not be accepted.

2.03 ELECTRONIC MAIL FORMAT

A. The use of email is encouraged to speed up turn-around of submittals and to clarify and answer questions posed by the Engineer and the Contractor. Hard paper copies of emails shall be attached to accepted and/or returned submittals.

2.04 QUANTITIES

A. One electronic submittal in PDF format of all shop drawings or material submittals and schedules required for the Work of the various trades, and the Engineer shall pass upon them with reasonable promptness, making desired corrections.

B. One electronic submittal in PDF format of manufacturers' standard schematic Working Sketch(es) and/or Shop Drawing(s).

C. One electronic submittal in PDF format of manufacturers' calculations, and of manufacturer's standard data.

D. One electronic submittal in PDF format of manufacturers' printed installation, erection, application and placing instructions.

E. Three (3) samples of each manufactured item when sample submittal is specified in the various Specification Sections, unless otherwise specified. The required quantities may be reduced upon written approval of the Engineer.

F. One electronic submittal in PDF format of inspection reports and test reports.

G. One electronic submittal in PDF format of engineer's calculations, with seal and signature of the Professional Engineer currently registered in the State of California for the discipline involved.

H. One electronic submittal in PDF format of operations and maintenance manuals.

I. One (1) Contractor's Transmittal Form.

PART 3 - EXECUTION

3.01 CONTRACTOR'S REVIEW

A. Review submittals, stamp and sign as reviewed-and-approved, before submission to the Engineer. Failure to comply with this requirement may result in immediate return of the submittal without review.

3.02 ENGINEER'S AND OWNER'S REVIEW

A. Submittals will be reviewed for conformance to requirements of the Contract Documents. Review of a separate item will not constitute review of an assembly in which the item functions. Review will not relieve Contractor from Contractor's responsibility for accuracy of submittals, conformity of submittals to requirements indicated, compatibility of described product with contiguous products and the rest of the system, or for prosecution and completion of the Contract in accordance with the Contract Documents.

B. The Engineer will review submittals for general conformance with the Contract Documents and mark, sign and date the "review-and-disposition".

C. Action communication shall have the following meanings:

1. REVIEWED AND ACCEPTED is an acceptance, and means every illustration and description appears to conform to the respective requirements of the Contract Documents; fabrication, assembly, manufacture, installation, application and erection of the illustrated and described product may proceed. Another submittal does not need to be resubmitted.

2. REVIEWED AND ACCEPTED AS NOTED – NO RESUBMITTAL is an acceptance, and means every illustration and description appears to conform to the respective requirements of the Contract Documents upon incorporation of the reviewer's corrections:

a. If the Contractor accepts the corrections then fabrication, assembly, manufacture, installation, application and erection of the illustrated

and described product may proceed. Submittals so marked need not be resubmitted. Show the reviewer's corrections on the As-Built Shop Drawings or Working Sketches.

b. If the Contractor challenges the validity of the reviewer's exception, no Work on this issue will be allowed until there is a written resolution to the challenge. Upon resolution, a resubmittal may be required. Show the reviewer's corrections on As-Built Shop Drawings or Working Sketches.

3. DISAPPROVED MAKE CORRECTIONS – RESUBMITTAL REQUIRED is not acceptable as submitted and means corrections that may be noted in the Comments section of Engineer's response to the submittal need to be addressed and resubmittal is required.

4. DISAPPROVED AS NOTED DEVELOP REPLACEMENT – RESUBMITTAL REQUIRED is not acceptable as submitted replacement of submitted information and resubmittal is required.

5. REVIEWED-AND-PARTIALLY ACCEPTED – REVIEWER'S REMARKS NOTED – RESUBMITTAL REQUIRED is a partial acceptance. The Contractor must revise those portions of the submittal, which the reviewer deemed incorrect – that does not conform to the respective requirements of the Contract Documents.

6. PARTIALLY REVIEWED – ADDITIONAL INFORMATION REQUIRED AS NOTED – SUBMIT INFORMATION is not acceptable at this stage.

7. INCOMPLETE. COMPLETE AND RESUBMIT – RESUBMITTAL REQUIRED is submittal is incomplete for approval consideration and complete information and resubmittal is required.

8. INCOMPLETE. SUBMIT MISSING PORTIONS – RESUBMITTAL REQUIRED is submittal is incomplete with portions of the submittal missing for approval consideration and complete information and resubmittal is required.

9. RECORD ONLY means the submittal was reviewed, but not for acceptance, and was received for information only.

10. REVIEWED-and-REJECTED is a rejection, and means the submittal is deficient to the degree the reviewer cannot correct the submittal with a reasonable degree of effort, has not made a thorough review of the submittal, and the submittal is to be deleted. An entirely new submittal is warranted.

D. One (1) marked up PDF of Shop Drawings and Working Sketches, one (1) copy of product data, and one (1) sample will be returned to the Contractor.

E. The Engineer shall review-and-return initial submittals with an "action" within ten (10) calendar days after submittals have been received. Resubmittals will be returned within five (5) calendar days.

3.03 CONTRACTOR'S RESPONSIBILITIES

A. Coordinate each submittal with requirements of the Work – Place particular emphasis upon ensuring each submittal of one trade is compatible with other submittals of that trade and submittals of other trades.

B. Format submittals as outlined in Article 2.02 of this Specification Section, or other format accepted by the Engineer.

C. "Review and Acceptance" by the Engineer of submitted drawings and submittals, and associated calculations does not relieve the Contractor from responsibility for errors or omissions in their drawings, sketches and submittals, and their associated calculations, or from deviations from the Contract Documents, unless such deviations were specifically called to the attention of the Engineer, in the writing, submitted with the drawings, sketches and submittals. The Contractor is responsible for correctness, accuracy and completeness of their drawings, sketches and submittals, for shop fits and field connections, dimensions and quantities and for results obtained by use of such drawings and submittals.

D. Distribution of Submittals After Review – Distribute prints of "reviewed and accepted" submittals, bearing the Engineer's signature, to concerned subcontractors, suppliers and fabricators, and to concerned members of Contractor's workforce.

E. Contractor's liability to the Engineer and/or Owner, in case of deviations in the submittals from requirements of the Contract Documents, is not relieved by the Engineer's "review and acceptance" of submittals containing deviations, unless the Engineer and Owner expressly approves deviations by issuing a Change Notice and or Order.

F. The Contractor shall not start Work for which submittals are required, until submittals bearing the Engineer's signature indicating "review and complete or partial acceptance" have been received.

G. Before making submittals, ensure products are available in quantities required by the Contract.

H. Verify field measurements, catalog numbers and similar data.

I. Resubmittals – Make any corrections required by the Engineer and resubmit for "review and acceptance." Direct specific attention in writing, on resubmitted Working Sketch or Shop Drawing to revisions other than the corrections by the Engineer on the previous submittal.

3.04 SHOP DRAWING

A. Prepare Shop Drawings to a scale large enough to easily depict and annotate each of various items.

B. Submit Shop Drawings for "review and acceptance."

C. When the Work is completed, submit a final, corrected, reproducible of each Shop Drawing. Show the Work as actually installed, placed, erected and applied on each Shop Drawing. Mark each Shop Drawing "AS-BUILT."

3.05 PRODUCT DATA

A. Modify manufacturers' standard schematic Working Sketches to delete information which is not applicable to the Contract. Supplement standard information with additional information applicable to this Contract.

B. Modify manufacturers' standard catalog cuts, brochures, diagrams, schedules, performance charts, illustrations, calculations, and other descriptive data to delete information which is not applicable to the Contract. Indicate dimensions, clearances, performance characteristics, capacities, wiring and piping diagrams, controls, and other information as required.

C. Modify manufacturer's printed installation, erection, application and placing instructions to delete information which is not applicable to the Contract.

D. Failure to modify the above items contained in Articles A, B and C may result in rejection of the submittal.

E. Include appropriate information as required herein and by the Specification sections.

F. Submit Certificates of Compliance only for those products called out in these Specifications not later than thirty (30) days before products are installed. Have copy of certificate accompany the product for which the certificate is prepared. Include on the certificate:

1. Affirmation that the product complies with respective requirements indicated.

2. Submittal date, Contractor's name and address, Contract Title and Number, product represented and its location in the Contract, producer's name, product trade name and catalog number, place of product origin, test date, testing organization's name and address, quantity of the product furnished, and related Contract Drawing and Specification Section numbers.

3. Signature of an officer or other authorized representative of the manufacturer or producer.

3.06 SAMPLES

A. Submit samples of sizes and quantities to clearly illustrate full color range and functional characteristics of products and materials, including attachment devices. Indicate country of origin.

B. Erect field samples and mock-ups at the Worksite as specified in Specification Sections and as may be necessitated by the Contractor submitting value engineering proposals or substitutions, at locations "reviewed and accepted" by the Engineer.

C. Include appropriate information as required and indicate the Specification Section. Have product data accompany samples.

D. The Engineer reserves the right to require submission of samples or site mock-ups of any material whether or not particularly mentioned in Specification Sections.

3.07 WORKING SKETCHES

A. Identify Working Sketches by a submittal number based on Specification Section number and provide reference to Contract Drawing numbers.

B. If required by Contract Specifications or Drawings, have Working Sketches prepared, stamped and signed by an engineer of the involved discipline, currently registered as a Professional Engineer in the State of California.

C. Verify field measurements and, where applicable, coordinate with pertinent Contract Documents from other Contracts.

D. Do not begin Work that require Working Sketches and associated calculations until Working Sketches and calculations have been "reviewed and accepted" by the Engineer; the Engineer's exceptions, if any, have been addressed; and submittals have been returned to the Contractor with the required "review and acceptance" signature.

E. Distribute copies of Working Sketches and calculations after "review and acceptance" by the Engineer.

3.08 CALCULATIONS

A. Have calculations, required by Technical Specification Sections, stamped and signed by a Professional Engineer of the involved discipline, registered in the State of California. When calculations accompany drawings and sketches in a submittal, the body of the calculations must contain cross references to the individual drawing to which the page of the calculations pertain.

3.09 SUBSTITUTIONS

A. Substitutions indicated, or implied, on Shop Drawings and Working Sketches or in product data submittals will not be considered unless a request for substitution has been submitted in conformance with this Specification Section.

B. The list of materials, products and supplies, and the list of methods of construction for substitution of those indicated will be considered only if those requests have been submitted. “Review and acceptance” of substitute items or methods will be only for characteristics and the use named in the “acceptance.” This “acceptance” shall not be interpreted as a modification of Contract Specifications or Contract Drawings, nor to establish “acceptance” of products and methods for other portions of the Owner’s Project. “Acceptance” of a substitution does not relieve the Contractor of responsibility of fulfilling requirements of the Contract Documents. The Engineer will judge quality and suitability of substitute items or methods and its decision is final. If use of substitute products or methods involves redesign of other parts of the Work, perform redesign and submit for “review and acceptance” by the Engineer. Bear both the cost of redesigning by the Contractor and its Engineer and the cost of evaluating the substitutions by the Engineer.

C. Include the following information with documentation for materials, products and supplies:

1. Complete data substantiating compliance of proposed substitution with requirements of the Contract Documents.

2. Identification of materials, products or supplies, including manufacturer’s name, address, catalog name and number.

3. Installation characteristics, installation Shop Drawings and Working Sketches and manufacturer’s literature, including product description, performance and test data, and reference standards if pertinent.

4. Name and address of projects on which the product was used under similar circumstances, and date of installation.

5. Itemized comparison of proposed substitution with the item specified. Include in a tabular form differences in materials, size, finish, estimated life,

estimated maintenance, availability of spare parts and repair services, energy consumption, performance capacity, salvage ability and manufacturer's warranties.

6. Effect of change on the "accepted" Baseline Construction Schedule. State time savings, time delays or "no change in schedule."

7. Accurate cost data for the proposed substitution in comparison with the product specified.

8. Equitable adjustment (cost or credit) which the Contractor proposes to offer the Owner.

9. When applicable or requested by the Engineer, provide off-the-shelf samples of the specified item and the proposed substitution.

D. Certify the following when making a request for substitution:

1. The Contractor has personally investigated the proposed item and determined it to be equivalent, or superior, to that indicated; and update information as new or different data becomes known to Contractor.

2. Furnish the same, like or reasonable warranty for substitution as for the product specified.

3. Coordinate installation of the "reviewed and accepted" substitution into the Work, and make those changes, subject to "review and acceptance" by the Engineer, required for the Work to be complete in all respects.

4. Waive claims for additional costs related to the substitution.

5. Provide complete cost data, including related costs, except the costs of "review and acceptance" and possible redesign by the Engineer of the Contractor's design.

E. Substitutions indicated, or implied, on Shop Drawings and Working Sketches or product data submittal will not be considered unless a request for substitution has been submitted in conformance with this Specification Section.

F. Include the following information in documentation for construction methods:

1. Detailed description of proposed methods.

2. Working Sketches illustrating the methods.

3. Itemized comparison of proposed substitute methods with methods shown, with product implied or specified. Include differences in estimated time for execution, labor, materials, revisions to construction process, and cost.

3.10 EQUALS

A. If the Contract Documents state products and have "or equal" or "or similar" the Contractor has the option to use the product stated in the Contract Documents and not make a submittal on the product or to propose an equal or similar product by submitting the products description data and specifications. The Engineer shall "review-and-disposition" on the product.

3.11 WORK PLANS

A. When specified in the Contract Documents, the Contractor shall submit narrative(s) with Working Sketch(es) on the methods-and-means, products, materials and equipment used and execution procedures to build and complete the work. The Engineer shall "review" work plans for the Contract Documents conformance. The Engineer shall disposition work plans according to Contract Documents conformance only. The Engineer may provide recommendations and suggestions on the Contractor's method-and-means which are not specified in the Contract Documents. The Contractor is not obligated to follow the Engineer's recommendations and/or suggestions.

PART 4 - MEASUREMENT AND PAYMENT

4.01 METHOD OF MEASUREMENT

A. The Work of this Section will not be measured separately for payment unless the contractor submits a "schedule-of-values" that is "reviewed and accepted" by the Engineer for measuring progress on submittals.

4.02 BASIS OF PAYMENT

A. Payment will be made under Specification Section 01200 Project Management, Administration and Facilities Operation. A lump sum contract value may be proportioned if a "schedule-of-values" is proposed by the Contractor and "reviewed and accepted" by the Engineer.

- END OF SECTION 01330 -

SECTION 01500

TEMPORARY FACILITIES

PART 1 - GENERAL

1.01 GENERAL

A. The Contractor shall provide all temporary facilities and utilities required for completion of the Work as well as safety precautions and programs. No attempt is made to set out in detail the Contractor's means or methods necessary to accomplish the tasks involved. Recognition of these temporary facilities and activities is provided only to allow the Contractor to identify necessary additional costs in planning the Work. The following items are of concern to the Owner and are representative of the temporary facilities, utilities and activities which are solely the Contractor's responsibility.

1.02 TEMPORARY OFFICES

A. Project Offices

1. The Contractor shall maintain on the Project Site a suitable Contractor's office at or near the site of the Work, in which shall be kept project copies of the Contract Documents, project progress records, project schedule, shop drawings, and other relevant documents that shall be accessible to the Owner and Engineer during normal working hours.

2. The office shall be the headquarters of the Contractor's representative authorized to receive drawings, instructions and other communications or articles. Any communication given or delivered to the said representative at the Contractor's office in his absence shall be deemed to have been delivered to the Contractor.

3. Contractor shall supply a field office large enough for space to accommodate the Engineer with power and lights. Provide one desk, chair, 4-drawer filing cabinet and two visitor's chairs; folding chairs are acceptable as visitor's chairs.

4. Contractor's office shall be sized to accommodate the Weekly PPR meetings.

1.03 TEMPORARY UTILITIES

A. Electrical Service

1. The Contractor shall arrange with the local utility or provide on-site generation to provide adequate temporary electrical service to provide all power for heating, lighting, operations of Contractor's plant or equipment and for any other use by Contractor. The Contractor shall then provide adequate jobsite distribution facilities conforming to applicable codes and safety regulations. Contractor shall provide, at Contractor's own cost, all electric power required for construction, testing, general and security lighting, and all other purposes whether supplied through temporary or permanent facilities.

B. Water

1. The Contractor shall pay for and shall construct all facilities necessary to furnish water for Contractor's use during construction.

   a. The Contractor may make arrangements with the Owner to use non-potable water where appropriate during construction.

   b. During periods of canal outage, the Contractor may access OID water through their rural water system at fire hydrants in the east portion of greater Oakdale in accordance with standard forms and procedures (see attached application "Construction Water from OID's Rural Water System").

2. Water used for human consumption shall be kept free from contamination and shall conform to the requirements of the state and local authorities for potable water.

C. Temporary Lighting

1. The Contractor shall provide temporary lighting in all work areas sufficient to maintain a lighting level during working hours not less than the lighting level required by Cal/OSHA standards. As permanent lighting facilities are completed they may be used in lieu of temporary facilities, provided however, that bulbs, lamps, or tubes of such facilities used by the Contractor shall be replaced prior to final acceptance of the Work.

D. Heating and Ventilation

1. The Contractor shall provide means for heating and ventilating all work areas as may be required to protect the Work from damage by freezing, high temperatures, weather, or to provide a safe environment for workers.

Unvented direct fire heaters shall not be used in areas where freshly placed concrete will be exposed to the combustion gases until at least two (2) hours after the concrete has attained its initial set.

E. Sanitary Facilities

1. The Contractor shall provide suitable and adequate sanitary conveniences for the use by Contractor's staff at the site of the Work. Such conveniences shall include chemical toilets or water closets and shall be located at appropriate locations at the site of the Work. All sanitary conveniences shall conform to the regulations of the public authority having jurisdiction over such matters. At the completion of the Work, all such sanitary conveniences shall be removed and the site left in a sanitary condition.

2. With respect to sanitation facilities, if the Work is federally funded the Contractor shall cooperate with and follow directions of representatives of the Public Health Service and the State. State and County Public Health Service representatives shall have access to the Work, whether it is in preparation or progress, and the Contractor shall provide facilities for such access and inspection.

1.04 ACCIDENT PREVENTION

A. Precaution shall be exercised by the Contractor at all times for the protection of persons (including Owner, Engineer, and Regulatory Agency employees) and property. The safety provisions of applicable laws, and of building and construction codes shall be observed. Machinery, equipment and other hazards shall be guarded or eliminated.

B. First aid facilities and information posters conforming at least to the minimum requirements of the Occupational Safety and Health Administration shall be provided in a readily accessible location or locations.

C. The Contractor shall make all reports as are, or may be, required by an authority having jurisdiction, and permit all safety inspections of the Work being performed under this Contract. Before proceeding with any construction work the Contractor shall take the necessary action to comply with all provisions for safety and accident prevention.

1.05 TEMPORARY CONSTRUCTION FACILITIES

A. Construction hoists, elevators, scaffolds, stages, shoring, and similar temporary facilities shall be of ample size and capacity to adequately support and move the loads to which they will be subjected. Railings, enclosures, safety devices, and controls required by law or for adequate protection of life and property shall be provided.

B. Temporary supports shall be designed with an adequate safety factor to assure adequate load bearing capability. The Contractor shall submit design calculations prepared by a professional registered engineer licensed in California for staging and shoring prior to application of loads.

C. Barriers shall be placed at each end of all excavations and at such places as may be necessary along excavations to warn all pedestrian and vehicular traffic of such excavations from one (1) hour before sunset each day to one (1) hour after sunrise of the next day until such excavation is entirely refilled, compacted, and paved. All excavations shall be barricaded in such a manner as to prevent person from falling, walking, or otherwise entering any excavation in any street, roadway, parking lot, treatment plant, or any other area, public or private.

D. The Contractor shall adequately identify and guard all hazardous areas and conditions by visual warning devices and, where necessary, physical barriers. Such devices shall, as a minimum, conform to the requirements of Cal/OSHA.

E. At such time or times any temporary construction facilities and utilities are no longer required for the Work, the Contractor shall notify the Engineer of the intent and schedule for removal of the temporary facilities and utilities and obtain the Engineer's approval before removing the same. As approved, the Contractor shall remove the temporary facilities and utilities from the site as the Contractor's property and leave the site in such condition as specified, as directed by the Engineer, and/or as indicated on the Plans.

1.06 PROTECTION OF EXISTING ITEMS

A. The Contractor shall protect all existing structures, trees, shrubs, and other items on the Project Site that are to be preserved, by substantial barricades or other devices commensurate with the hazard, from injury or destruction by vehicles, equipment, workmen, or other agents.

B. Contractor will be held responsible for any damage to existing structures, roadways and walkways, work, materials, or equipment because of Contractor's operations and shall repair or replace any damaged structures, roadways and walkways, work, materials, or equipment to the satisfaction of, and at no additional cost to, the Owner.

1. Contractor shall repair any damage to and maintain public and site access roads and related public or private facilities, and the road and facilities shall be in the same or better condition at Project Completion. No subsurface data is available for the road.

1.07 PROJECT SECURITY

A. The Contractor shall make adequate provision for the protection of the Work area against fire, theft and vandalism, and for the protection of the public against exposure to injury.

B. Except as otherwise provided, the Contractor shall enclose the site of the Work with a fence as needed that is adequate to protect the Work and temporary facilities against acts of theft, violence or vandalism.

C. In locations where the probability of such acts is reasonably remote, this fencing requirement may be limited to the temporary offices and storage areas. The Contractor shall bear the responsibility for protection of plant and material on the site of the Work.

D. Sufficient number of fire extinguishers of the type and capacity required to protect the Work and ancillary facilities, shall be provided in readily accessible locations.

E. In the event all or part of the site is to be permanently fenced, this permanent fence or a portion thereof may be built to serve for protection of the Work site, provided however that any portions damaged or defaced shall be replaced prior to final acceptance.

F. Temporary openings in existing fences shall be protected to prevent intrusion by unauthorized persons. During night hours, weekends, holidays, and other times when no Work is performed at the site, the Contractor shall provide temporary closures or guard service to protect such openings. Temporary openings shall be fenced when no longer necessary.

1.08 ACCESS ROADS AND STAGING AREA

A. The Contractor shall maintain adequate access roads on the Project Site to provide for delivery of material and for access for construction. For a road to be considered adequately maintained, it shall be reasonably dust free.

B. Adequately maintained access roads shall be maintained to all storage areas and other areas to which frequent access is required. Similar roads shall be maintained to all existing facilities on the site of the Work to provide access for maintenance and operation. Where such temporary roads cross buried utilities that might be injured by the loads likely to be imposed, such utilities shall be adequately protected by steel plates or work planking, or bridges shall be provided so that no loads shall discharge on such buried utilities.

C. The Contractor shall limit the location of their storage of equipment and materials outside of the Project Site. The Contractor shall make its own arrangements for space that may be required and bear all associated costs.

D. The Contractor shall provide any additional temporary storage required for the protection of equipment and materials as recommended by manufacturers of such materials.

E. Storage and protection:

1. Materials and equipment shall be stored in accordance with supplier's written instructions, with seals and labels intact and legible. Exposed metal surfaces of valves, fittings and similar materials shall be coated in accordance with manufacturer's recommendations to prevent corrosion.

2. Storage shall be arranged to provide access for inspection. The Contractor shall periodically inspect to assure materials and equipment are undamaged and are maintained under required conditions.

1.09 TRAFFIC CONTROL

A. Contractor shall conduct Contractor work to interfere as little as possible with public travel, whether vehicular or pedestrian. Whenever it is necessary to cross, obstruct, or close roads, driveways or walks, whether public or private, Contractor shall provide and maintain suitable and safe bridges, detours, or other temporary expedients for the accommodation of public and private travel, and shall give reasonable notice to owners of private drives before interfering with them. Such maintenance of traffic will not be required when Contractor has obtained written permission from the owner and tenant of private property involved, to obstruct traffic at the designated point.

1.10 SPECIAL CONTROLS

The Contractor shall take all reasonable means to minimize inconvenience and injury to the public by dust, noise, diversion of stormwater, or other agencies under their control.

A. Dust Control

1. The Contractor shall take whatever steps, procedures, or means as are required to limit dust generated by Contractor operations during the Work. Dust shall be controlled to the standards of the local governing agency or, in the absence of local standards, to the satisfaction of the Engineer. Dust control shall extend to any unpaved road that the Contractor or any of Contractor's Subcontractors are using to excavation or fill areas, to demolition operations, and to other activities. Control shall be by sprinkling, use of dust palliatives, modification of operations, or any other means acceptable to the local governing agency or, in the absence of same, the Engineer.

B. Noise Abatement

1. In inhabited areas, particularly residential, operations shall be performed in a manner to minimize unnecessary noise generation. In residential areas, special measures shall be taken to suppress noise generated by repair and service activities during the night hours.

C. Drainage Control

1. Care shall be taken to disturb the pre-existing drainage pattern as little as possible. Particular care shall be taken not to direct drainage water onto private property or into streets or drainage ways inadequate for the increased flow. Drainage means shall be provided to protect the Work.

PART 2 - PRODUCTS – (NOT USED)

PART 3 - EXECUTION – (NOT USED)

PART 4 - MEASUREMENT AND PAYMENT

4.01 METHOD FOR MEASUREMENT

A. No measurements for Temporary Facilities shall be made.

4.02 BASIS OF PAYMENT

A. All work under this Section is incidental and is not subject for payment or is paid for under another Specification Section.

- END OF SECTION 01500 -

X:\Project\3000_prj\3818R OID Tunnel 8\Reports\Contract Docs_Specs\DIV 01\01500 Temporary Facilities 20210721.docx

ATTACHMENT A
Construction Water from OID's Rural Water System Application

OAKDALE IRRIGATION DISTRICT

1205 East F Street
Oakdale, CA 95361
Phone: (209) 847-0341 Fax: (209) 847-3468

Construction Water from OID's Rural Water System

Name: _____ Date of Application: _____

Mailing Address: _____

_____

Hydrant Location: _____

_____

Phone Number(s): _____

_____

Bulk water for construction places larger than normal residential demands on the O.I.D. Rural Water System. The following charges and retainer fee apply to contractors requiring bulk water:

Retainer fee for Hydrant Meter Use:	$500.00
Processing Charge:	
In-District Landowner	106.00
Out-of-District Landowner	212.00
Use rate per 100 cubic feet:	0.52

Contractors must notify O.I.D. 48 hours in advance of the desired time of use. The processing charge and retainer fee must be paid prior to O.I.D. installing hydrant meters. Upon completion of use, provided the meter is undamaged, the retainer fee will either be refunded (less the processing fee and usage charge) or an additional billing will prepared, whichever applies. For further information, consult O.I.D.'s Rural Water System Domestic Water Policy Section III F.

FOR OFFICE USE ONLY

Date of deposit:	_____	Beginning Meter Reading:	_____
Receipt number:	_____	Date Meter Returned:	_____
Create deposit invoice:	_____	Ending Meter Reading:	_____
Forwarded to CFO:	_____	Forwarded to CFO:	_____
Forwarded to WUD:	_____	Bill / Refund for actual use:	_____
Date Meter Installed:	_____		

SECTION 01700

CONTRACT CLOSEOUT

PART 1 - GENERAL

1.01 GENERAL

A. It is the intent of these Contract Documents that the Contractor shall deliver a complete and operable facility capable of performing its intended functions and ready for use.

1.02 CLEANING

A. Throughout the period of construction, the Contractor shall keep the Work site free and clean of all rubbish and debris, and shall promptly remove from the site, or from property adjacent to the site of Work, all unused and rejected materials, surplus earth, concrete, shotcrete, and debris, excepting select material that may be required for refilling or grading.

1.03 FINAL SITE CLEAN-UP

A. Upon completion of the Work, and prior to final acceptance, the Contractor shall remove from the vicinity of the Work, all surplus material, and equipment belonging to him or used under Contractor's direction during construction, any and all temporary facilities remaining at the completion of the project.

1.04 WASTE DISPOSAL

A. The Contractor shall dispose of surplus materials, waste products, demolition materials, and debris. The Contractor shall transport and dispose of waste materials in accordance with applicable laws and regulations.

1.05 PROJECT RECORD DOCUMENTS

A. The Contractor shall maintain at the site, available to the Owner and Engineer, one (1) copy of the Contract Documents, Drawings, Shop Drawings, Change Orders, and other modifications in good order and marked to record all changes made during construction. These Documents shall be delivered to the Engineer upon completion of the Work.

B. Record Documents shall be reviewed during progress meetings to ascertain that all changes have been recorded.

C. Store Record Documents separate from documents used for construction.

1.06 TOUCH-UP AND REPAIR

A. The Contractor shall touch-up or repair finished surfaces on structures, equipment, fixtures, or installations that have been damaged prior to final acceptance. Surfaces on which such touch-up or repair cannot be successfully accomplished shall be completely refinished or in the case of hardware and similar small items, the item shall be replaced. Such items shall include, but not be limited to, the following:

1. Road surfaces

2. Exposed structure surfaces

PART 2 - PRODUCTS – (NOT USED)

PART 3 - EXECUTION – (NOT USED)

PART 4 - MEASUREMENT AND PAYMENT

4.01 METHOD FOR MEASUREMENT

A. No measurements for Contract Closeout shall be made.

4.02 BASIS OF PAYMENT

A. All work under this Section is incidental and is not subject for payment or is paid for under another Specification Section.

- END OF SECTION 01700 -

X:\Project\3000_prj\3818R OID Tunnel 8\Reports\Contract Docs_Specs\DIV 01\01700 Contract Closeout 20210721.docx

DIVISION 02

SECTION 02050

MOBILIZATION AND DEMOBILIZATION

PART 1 - GENERAL

1.01 SCOPE

A. Specified Work – This Specification Section outlines and specifies the requirements for moving in personnel and equipment, set up Temporary Facilities, i.e., offices, shop buildings, storage buildings, Staging and Laydown Areas, and other temporary structures. It also specifies requirements for:

1. Temporary utilities, i.e., electric power, construction and potable waters, sanitary services, trash and garbage services, high-speed internet service, and security services.

2. Photograph and Video documentation of pre-construction Project Site conditions, including Willms Road and related public facilities.

3. Preparations of the Project Site prior to handling or movement of any equipment, materials or hazardous materials and wastes.

4. Demobilization of the Temporary Facilities and temporary services.

B. Work Inclusions – The Work shall include all labor, materials, equipment and incidentals to perform the Work specified in this Specification Section.

1. If used, Contractor shall provide duration and extend unit price rental at the Optional Construction Office Site/Staging Area as detailed in the Bid.

2. The Staging Area or Laydown Area shall host the Construction Facilities including the Engineer's and Contractor's Office(s).

3. Where installed, fences shall be removed upon Final Completion.

4. Upon Final Completion the entire area(s) shall also be restored in-kind to its prior pre-construction condition.

5. The area(s) shall be in compliance with appropriate environmental mitigation measures as is required in order to receive payment under this Specification Section.

1.02 BACKGROUND AND SITE CONDITIONS

A. The Project Site is accessed from Willms Road south of California State Highway 108/120 as shown on the Contract Drawings. The Optional Staging Area and alternate laydown areas are accessed from Sonora Road.

B. Project Site access shall be negotiated by the Owner, where necessary.

C. The location of Temporary Facilities shall be determined by the Contractor, as approved by the Owner. Location options are shown on the Contract Drawings.

D. Power services are available in proximity to the Staging Area available on Sonora Road. No power services are available in proximity to the Project Area. Contractor is to provide generator(s) and appropriate power transmission facilities at the Project site.

1.03 DEFINITIONS

A. Completion – Date at which all Work has been completed, including demobilization and cleanup, as approved by Owner.

B. Demobilization – Removal of all personnel, equipment, materials, temporary facilities, and wastes.

C. Double Lock – Two separate padlocks locked in series with each other, allowing two separate persons with two different keys to enter the same restricted area.

D. Laydown Area – A portion of the site at locations shown on the project plans to be prepared as indicated in this Specification, and where storage of construction equipment and materials is permitted.

E. Mobilization – Move in of all personnel, equipment, materials, and temporary facilities.

F. Project Boundary Limits – Within fifty (50) feet of the canal/tunnel centerline (one hundred (100) feet total width), unless noted or otherwise shown on the Contract Drawings, which are the Owner's right-of-way limits.

G. Project Site – Areas occupied by the Contractor, equipment, and materials during mobilization, construction, and demobilization, including the improvement construction areas within the Project Boundary Limits shown in the Contract Documents, Staging Areas, Laydown Areas, and access ways.

H. Site Preparation – Site work necessary to facilitate Mobilization.

I. Staging Area – A portion of the site shown on the Contact Drawings to be prepared as indicated in this Specification Section, and where placement of Temporary Facilities is permitted.

J. Substantial Completion – Date at which the Work defined in the Contract Documents and along the Project Boundary Limits must be completed.

K. Temporary Facilities – Any container, trailer, building, utilities, fences, or other facility placed by the Contractor to facilitate this Project, that must be removed by the Contractor after completion of construction, unless otherwise noted in the Contract Documents.

L. Test-Pitting and Pot-Holing – Techniques used to investigate soil conditions and to locate exact positions of utilities, low ground structures and alike at shallow depths by use of either light machinery and/or hand digging. Dig to an adequate depth to allow a soils engineer or geologist to enter the pit to make observations and to allow the Contractor to locate utilities and other fragile structures.

1.04 SPECIFICATIONS, CODES, STANDARDS AND REPORTS

A. General – Unless otherwise revised, altered, modified and/or stated in this Specification Section or Related Work Specification Sections, the Contractor shall comply with the following Specifications, Codes, Standards and Reports, and their latest published edition.

1. California Building Code (CBC), latest edition, California Code of Regulations, Title 24, Part 2, Volumes 1 and 2.

2. OID Standard Specifications and Drawings

3. Standard Specifications for Public Works Construction (Green book), latest edition.

4. California Code of Regulations, Title 8, Chapter 4 – Division of Industrial Safety Orders (Cal-OSHA), Subchapter 4 – Construction Safety Orders (Sections 1500 – 1939).

5. U.S. Federal Occupational Safety and Health (Fed-OSHA) Regulations (Standard – 29 CFR), Safety and Health Regulations for Construction.

6. Best Management Practices for Construction, California Stormwater Quality Association, January 1, 2003, with latest edition updates.

RELATED WORK SPECIFICATION SECTIONS

01200 Project Management, Administration and Facilities Operation
02210 Site Preservation and Materials Disposal

02280 Erosion, Sediment and Pollution Control
02290 Stormwater Management
02320 Earthwork

1.05 DESIGN PARAMETERS – (NOT USED)

1.06 QUALITY CONTROL AND ASSURANCE REQUIREMENTS

A. Refer to Contract Specification 01250 Quality Control and Assurance.

1.07 SAFETY AND SECURITY REQUIREMENTS

A. Work shall be completed in compliance with applicable federal and state safety and health regulations (Fed/OSHA and Cal/OSHA).

B. California Code Regulations, Title 8, Chapter 4 – Division of Industrial Safety Orders (Cal-OSHA), Subchapter 4 – Construction Safety Orders (Sections 1500 – 1938), and Subchapter 7 – General Industry Safety Orders (Sections 3200 – 6184) are the most applicable regulations for this Section.

C. The Contractor is responsible for safety and health of personnel including Contractor's employees, Subcontractor employees, and Supplier employees while on the Project, and shall prepare a written Project-specific Safety Plan.

D. The Engineer's and Owner's employees while on the Project will work under and abide by the Contractor's safety and health program.

E. The Contractor is responsible for security for Contractor facilities, equipment, incidentals, and the Engineer's and Owner's facilities within the Project area.

F. All facilities and utilities materials shall be installed according to manufacturers' instructions.

G. A licensed Electrician in the State of California shall perform electrical work. A licensed Plumber in the State of California shall perform plumbing work.

1.08 ENVIRONMENTAL REQUIREMENTS

A. During the life of the Work, environmental protection shall be provided and maintained to control pollution that may develop during the normal construction process.

B. The natural resources within the Project Boundary Limits, Staging Areas, Laydown Areas, access roads and paths, and any other areas occupied by the Contractor, equipment, and/or materials and outside the limits of permanent Work shall be preserved or restored to an equivalent or improved condition that is equal to the

pre-construction condition or an improved condition upon completion of the Project Work. Construction activities shall be confined to within the limits of the Work indicated or specified or by written permission from the Engineer and/or Owner.

C. Fish, birds and wildlife shall not be disturbed or harassed. Water flows and native habitat adjacent to the Project that is critical to the survival of fish and wildlife shall not be altered or otherwise significantly disturbed.

D. Work areas shall be managed and reclaimed to prevent sediment from entering the nearby surface drainages and water courses.

E. Traces of temporary construction facilities such as access ways, work areas, structures, stockpiles of excess or waste materials, and other signs of construction shall be removed and disposed of properly. Inorganic spoil from the earth excavations, and minor shotcrete and concrete spoils may be deposited at the clean spoil area(s) as indicated on the Contract Drawings. Impacted land surface areas shall be reclaimed using appropriate re-vegetation and watering techniques. No grading work is to be performed to re-contour existing lands.

F. Oily or other hazardous substances shall be prevented from entering the ground, canals, tunnels, drainage areas, or local bodies of water. Temporary fuel, oil or petroleum storage tanks shall be surrounded with a suitable containment of sufficient size and strength to contain the contents of the tanks in the event of leakage or spillage, pursuant to all applicable law. The Engineer shall approve such containers.

G. The fueling and lubricating of equipment and motor vehicles shall be conducted in a manner to protect against spills and evaporation. Lubricants to be discarded and excess oil shall be disposed of properly off-site.

H. Solid waste shall be picked up, controlled, and disposed of off-site. Food shall not be prepared, cooked, or disposed of in the Project Boundary Limits, Laydown Areas, or access ways. Contamination of the site or other areas shall be prevented when handling and disposing of wastes.

I. Chemical toilets or comparably effective units shall be provided for the workers.

J. Upon completion of Work, the Project Site shall be left clean and acceptable to both the Engineer and the Owner. The access ways to the Project Site shall be restored and left clean in accordance with state and county requirements.

1.09 CONTRACTOR SUBMITTALS

A. Pre-construction

1. Shortly before "Notice-to-Proceed," the Contractor shall submit a Work Plan with Working Sketches showing the proposed layout of the Contractor's Staging Area(s), drainage and dewatering facilities, stockpile areas, disposal areas, haul roads, temporary contaminated spoil area(s), temporary offices, storage areas, and all other temporary facilities. Prior to "Notice-to-Proceed," the Engineer will review a submitted Work Plan and Working Sketches and provide the Contractor a disposition at or shortly after "Notice-to-Proceed."

2. If the Contractor proceeds without an accepted Work Plan, he does so at Contractor's own risk and is subject to removal and/or relocation of the facilities at Contractor's own cost.

3. Submit the Contractor's Safety Plan to the Engineer for "review-and-acceptance."

4. Mobilization "Schedule-of-Values" – as per Article 4.01.C of this Specification Section and as required by Division 00 Bidding Requirements and Division 01 General Requirements.

5. Pre-construction photograph and video surveys according to Article 3.02.A and 3.02.B of this Specification Section.

   a. Submit to the Engineer for "review-and-acceptance."

1.10 SPECIAL CONDITIONS AND REQUIREMENTS

A. No person employed by the Contractor and its Subcontractors and its Suppliers shall set up and/or provide living quarters within the Owner's usage and Project Boundary Limits, without written permission from the Owner via the Engineer.

B. Existing Fences and Gates – All existing fences and gates within the project usage and Project Boundary Limits shall be repaired and placed back into service in a condition equal to or better than that prior to "Notice-to-Proceed." The Engineer shall determine the extent of repairs. Fences and gates outside the project usage and Project Boundary Limits damaged by the Contractor and its Subcontractor and its Supplier shall be repaired immediately by the Contractor and its Subcontractor and its Supplier at its expense.

C. Winter Canal Outage Period – Irrigation water will not be flowing in the Oakdale Irrigation District's South Main Canal between November 1 and February 28. Start and end dates of the Winter Canal Outage Period shall be determined by the Owner.

D. No spoils, unused materials, or Contractor tools or equipment shall remain in the canal as of the Substantial Completion Date.

E. Stormwater Management – Refer to Division 00, Section 00100 Project Description of these Contract Documents.

PART 2 - PRODUCTS

2.01 MATERIALS – (NOT USED)

2.02 CONSTRUCTION FACILITIES AND EQUIPMENT

A. Refer to Contract Specifications Section 01500 Temporary Facilities and Controls.

2.03 TEMPORARY FACILITIES

A. The Contractor shall provide temporary facilities and equipment required for performing the Work, including facilities specified for the Engineer's/Owner's use.

PART 3 - EXECUTION

3.01 GENERAL

A. Drivers shall use extreme caution when driving to and from the intersection of Willms Road and Highway 108/120 due to the danger associated with limited driver line-of site to highway traffic and to traffic entering the highway. Drivers shall use Willms Road to access the Project Site , as shown on the Project Drawings. No driving to and from the intersection of Sonora Road and Highway 108/120 or vice versa is permitted due to the dangers associated with limited driver line-of site to highway traffic and to traffic entering the highway. Drivers are to use Kennedy Road to access and leave the Staging Area on Sonora Road.

3.02 SITE MOBILIZATION

A. Provide at least one (1) week notice to the Engineer and Owner prior to mobilization. Coordinate mobilization and demobilization activities with the Engineer.

3.03 PRE-CONSTRUCTION PHOTOGRAPH AND VIDEO SURVEY

A. Perform a photograph and video survey of the Project site using electronic equipment of areas that will be occupied by the Contractor, equipment, materials, construction, access and temporary facilities. Before any work is performed on the Project, submit copies of both videos and photographs in electronic format, of the

preconstruction/existing conditions for "review-and-acceptance" by the Engineer. The photographs shall be in .JPG format and the video in .AVI or .MPG format. Areas to be documented by videos and photographs shall include, but shall not be limited to:

1. Staging and laydown areas.

2. District access roads, fences and gates.

3. Canal access ramps.

4. Canal liners, embankment and tunnel area within the Project Site.

5. The road extending from Highway 108/120 to Tunnel 8 (Willms Road and related public facilities).

3.04 STAGING AND LAYDOWN LAYOUT

A. Set up Staging and Laydown Areas in a neat and orderly manner. Accomplish required work in accordance with applicable portions of the Contract Documents and the Contractor's "reviewed-and-accepted" Staging and Laydown Work Plan and Working Sketches. See Staging and Laydown Areas identified on the Contract Drawings.

B. Place fences around the entire perimeter(s) of the area(s).

3.05 ACCESS SECURITY FENCES

A. Entrance gates to the sites already exist. Protect gates and fences during the Work and "double-lock" existing gates as directed by the Engineer and/or Owner and defined in Subsection 1.03 Definitions. Any damage to existing and new project fences caused by the Contractor and its Subcontractors and its Suppliers shall be repaired immediately by the Contractor and its Subcontractors and its Suppliers at its expense.

3.06 PROTECTION OF FACILITIES

A. Prevent any damage to existing facilities including but not limited to vandalism or theft. The Owner may deduct from the payments to the Contractor the cost for the repair and/or replacement of any damaged facility.

3.07 DEMOBILIZATION

A. Remove all temporary facilities, fences and utilities from the site upon satisfactory completion of the Work. Prior to final acceptance of the Work by both the Engineer and the Owner, restore all roads to their original condition, remove all rubbish and

construction debris, and leave the entire Project Site in a clean and orderly condition. Access ways to the Project Site shall be restored and cleaned in accordance with state and county requirements.

PART 4 - MEASUREMENT AND PAYMENT

4.01 METHOD FOR MEASUREMENT

A. Mobilization shall be measured as a percentage complete and accepted by the Engineer.

B. Demobilization shall be measured as a percentage complete and accepted by the Engineer.

C. The Engineer and/or Owner will "review-and-accept" a "Schedule-of-Values" submittal that has a reasonable amount and distribution of activities and monetary values for mobilization.

4.02 BASIS OF PAYMENT

A. Mobilization and demobilization shall be paid as a percentage complete of the Contract lump sum (LS) price. The mobilization bid amount shall not exceed fifteen percent (15%) of the total bid amount. The demobilization bid amount shall be equal to or greater than twenty-five percent (25%) of the mobilization bid amount.

B. Mobilization shall be paid following the issuance of the "Notice-to-Proceed" from the Engineer.

C. Demobilization shall be paid following final acceptance by the Engineer and Owner of items listed in Article 3.05.A. of this Specification Section.

D. The Contractor shall make payments directly to the property owner (Mr. Hunter) for use of the Optional Staging Area.

- END OF SECTION 02050 -

X:\Project\3000_prj\3818R OID Tunnel 8\Reports\Contract Docs_Specs\DIV 02\02050 Mob and Demob 20210721.docx

SECTION 02210

SITE PRESERVATION AND MATERIALS DISPOSAL

PART 1 - GENERAL

1.01 SCOPE

A. Specified Work – This Specification Section outlines and specifies the requirements for site preservation and materials disposal. It includes, but is not necessarily limited to:

1. Tree protection and removal.
2. Preservation and maintenance of District access roads.
3. Preservation and maintenance of Willms Road.
4. Preservation of existing fences.
5. Location and protection of existing utilities.
6. Clearing, grubbing and stripping
7. Disposal of inorganic debris and organic waste to an off-site location.
8. Disposal of excavated spoil – soil, rock and cementitious waste to a designated stockpile location.

B. Work Inclusions – The Work shall include all labor, materials, equipment and incidentals to perform the Work outlined and/or specified in this Specification Section.

1.02 BACKGROUND AND SITE CONDITIONS

A. The Work includes, but is not limited to, installing temporary water diversion measures in the canal; dewatering Tunnel 8 and the nearby canal as necessary; scale loose rock and enlarge Tunnel 8 sidewalls, crown and invert per plan; place new shotcrete tunnel lining closely behind tunnel scaling/enlarging as work progresses; remove debris from the tunnel; place new cast-in-place concrete tunnel invert; install final erosion control measures.

B. Existing concrete liners and invert materials that are removed as a part of this Work and concrete wash-out shall be considered Concrete Waste and shall be disposed by the Contractor off-site.

C. Soils and cementitious spoils incidental to new installations, including but not limited to canal clean up and shotcrete rebound, shall be considered Spoils and may be disposed by the Contractor offsite.

D. The Contractor shall determine the sizes and locations of the nearest landfills and concrete waste recycling facilities.

1.03 DEFINITIONS

A. Test-Pitting and Pot-Holing – Techniques used to investigate subsurface conditions and to locate exact positions of utilities, low ground structures and alike at shallow depths by use of either light machinery and/or hand digging. Test-Pit and Pot-Hole should be dug to an adequate depth as to allow a Geotechnical Engineer or Geologist to enter to make observations and to allow a Contractor to locate utilities and other fragile structures.

B. Topsoil – Excavated and reused material, graded, free of roots, rocks larger than ½ inch, debris, vegetation, and foreign matter.

C. Cementitious Material – Solid concrete particles that require disposal that are less than about one (1) inch in diameter. Cementation waste for this project will consist mostly of shotcrete rebound that is removed from shotcrete improvement areas.

D. Clearing – Clearing of grass, brush, trees, stumps, tree roots, debris and otherwise unsuitable material from the areas which are to be graded and/or excavated.

E. Concrete Waste – Solid concrete particles that require disposal that are larger than one inch in diameter. Concrete waste for this project will mostly consist of concrete and shotcrete that is removed from demolition of existing inverts and canal liners.

F. Grubbing – Removal of roots, buried vegetation, rubble, rubbish, unsuitable material, uncompacted fill, loose and saturated materials, abandoned underground utilities, and other foreign debris from areas that are to be graded and/or excavated.

G. Project Site – Areas occupied by the Contractor, equipment, and materials during mobilization, construction, and demobilization, including the improvement construction areas within the Project Boundary Limits shown in the Contract Documents, Staging Areas, Laydown Areas, and access ways.

H. Stripping – Removal of vegetation and topsoil from areas to receive fill or improvements, or to be excavated. The stripped material shall not be used as Engineered Fill. Deep stripping in localized areas is to remove unsuitable soil, rock, roots, or other concentrations of vegetation.

I. Suitable Material – Material, i.e., General Fill or Engineered Fill, which has met a certain set of criteria set forth by the Engineer, and therefore, can be used in construction activities.

J. Unsuitable or Unacceptable Material – Material, which has not met a certain set of criteria set forth by the Engineer; and therefore, cannot be used in construction activities.

K. Uncompacted Fill – Fill that is not compacted to requirements of the Contract Documents.

L. Engineered Fill Material – On-site material from excavations, or imported material that is free of organics, that passes a set of size requirements and material property requirements in the Contract Documents, that is approved by the Engineer, and that is compacted according to requirements in the Contract Documents.

M. Permanent Cutslope – Permanent excavated cutslopes. Excavations extend to the depths, elevations, or relative depths and elevations shown on the Contract Drawings.

N. Spoil – Excavated, demolished, or removed inorganic rock, soil, cementitious material or other materials that the Engineer approves prior to placement at stockpile location(s) designated by the Contract Documents and/or Owner.

O. Debris and Waste – Organic and/or inorganic waste, concrete waste, and debris that the Engineer deems not suitable for placement at the Owner's stockpile location(s).

1.04 SPECIFICATIONS, CODES, STANDARDS AND REPORTS

A. General – Unless otherwise revised, altered, modified and/or stated in this Specification Section or Related Work Specification Sections, the Contractor shall comply with the following Specifications, Codes, Standards and Reports, and their latest published edition:

1. California Building Code (CBC), California Code of Regulations, Title 24, Part 2, Volumes 1 and 2, latest edition

2. OID Standard Specifications and Drawings

3. State of California, Department of Transportation (Caltrans), Standard Specifications, latest edition

4. American Society for Materials and Testing (ASTM) D1557, Standard Test Methods for Laboratory Compaction Characteristics of Soil Using Modified Effort (Modified Proctor)

1.05 RELATED WORK SPECIFICATION SECTIONS

01200	Project Management, Administration and Facilities Operation
01250	Quality Control and Assurance
01320	Progress and Schedules
01330	Submittals
02050	Mobilization and Demobilization
02230	Clearing and Grubbing
02280	Erosion, Sediment and Pollution Control
02290	Stormwater Management
02320	Earthwork
03300	Concrete Cast-in-Place
03470	Shotcrete

1.06 DESIGN PARAMETERS – (NOT USED)

1.07 QUALITY CONTROL AND ASSURANCE REQUIREMENTS

A. Refer to General Requirements Specification 01250 Quality Control and Assurance.

1.08 SAFETY AND SECURITY REQUIREMENTS

A. All Work shall be done in compliance with all applicable federal and state safety and health regulations (Fed-OSHA and Cal-OSHA).

B. California Code Regulations, Title 8, Chapter 4 – Division of Industrial Safety Orders (Cal-OSHA), Subchapter 4 – Construction Safety Orders (Sections 1500 – 1938), and Subchapter 7 – General Industry Safety Orders (Sections 3200 – 6184) are the most applicable regulations for this Section.

C. Prior to the beginning of any activities, safety requirements will be addressed at pre-job meetings involving personnel of Owner, Contractor and Engineer familiar with important aspects of the Work.

1.09 ENVIRONMENTAL REQUIREMENTS AND PERMITS

A. The Contractor shall arrange for, be responsible for, and the Owner shall pay for a Construction General Permit, as per Specification Section 02280 Erosion, Sediment and Pollution Control, and/or any other environmental permit that is related to these Contract Documents. Contractor shall be responsible for reporting and submittal to the State of California Water Resources Control Board website for OID approval and submittal of fee payment.

B. The Contractor shall comply with the requirements of the environmental permits. Copies of the Categorical Exemption document for CEQA compliance and any Supplemental Environmental Requirements for this Work are filed and will be provided upon approval.

C. The Contractor shall arrange for, be responsible for, and pay for any additional permits, including but not limited to those listed in these Contract Documents.

1.10 CONTRACTOR SUBMITTAL

A. Pre-Construction Phase

1. Permits

a. Submit copies of permits secured for the Project to the Engineer for "review-and-information."

PART 2 - PRODUCTS (NOT USED)

PART 3 - EXECUTION

3.01 EXISTING FEATURES AND CONDITIONS

A. Verify existing conditions prior to starting site preparation. Provide pre-construction photographs and videos as noted in Specification Section 02050 Mobilization and Demobilization. The Contractor shall be responsible for verifying the location and status of utilities within the construction area.

B. Protect existing surface or subsurface improvements, facilities, utilities, roads, structures, etc., that are to remain after the completion of this Project. Any damage by the Contractor and its Subcontractor and its Supplier to existing features shall be repaired at the expense of the Contractor and its Subcontractor and its Supplier and shall be repaired immediately.

3.02 EXISTING UTILITIES

A. Notify public and private utility companies at least two (2) work days prior to commencement of work on this project to verify the location of existing utility lines. Call Underground Service Alert (USA) toll free at (800) 227-2600, 7:00 a.m. to 5:00 p.m., Monday through Friday.

B. Notify Engineer at least two (2) workdays prior to "test-pitting/pot-holing" in order for the Engineer to observe the Contractor's operations.

C. Prior to opening an excavation, make a considerable effort to determine whether underground utilities, i.e., sewer, water, fuel, gas, electric power, communication lines, etc., will be encountered. Where such underground installations do exist, determine their exact location by careful probing and/or hand digging to expose/uncover their locations. Adequately protect and support any exposed underground utility lines.

D. The locations of existing underground utilities, as indicated on the Contract Drawings, are based on the best information available from the utility owner or other documented sources. However, the Engineer assumes no responsibility for the accuracy of the information shown, or the inadvertent omission of any such information. Conflicts and/or discrepancies shall be immediately brought to the attention of the Engineer.

E. Unless noted otherwise, maintain in operation existing utilities.

F. Damage to existing utilities by the Contractor and its Subcontractor(s) and its Supplier(s) shall be repaired by the Contractor or its Subcontractor or its Supplier at it's own expense.

3.03 TREE PROTECTION AND REMOVAL

A. Limit tree removal to only those trees designated on the Contract Drawings. Removal of any tree or trees outside of the limits of the Work for construction considerations shall be "reviewed-and-accepted" by the Engineer prior to proceeding with the Work.

B. Trees to be removed shall be cut down, branched, stumps removed and transported to and legally disposed of off-site.

C. Protect trees near the limits of the Contractor's work area that may possibly be injured or damaged by the Contractor's operations. No ropes, cables or guys shall be fastened or attached to any existing trees.

D. Trim trees only as necessary to facilitate the contracted Work. Trimming requirements shall be "reviewed-and-accepted" by the Engineer and shall be accomplished in accordance with recognized standards for such work.

E. Avoid cutting tree roots. No tree roots shall be unnecessarily cut during trenching or excavation operations. All roots shall be neatly trimmed at the edge of the trench.

F. Paint all trimmed roots and/or branches one (1) inch diameter or larger with a heavy coat of a "reviewed-and-accepted" tree seal.

3.04 STRIPPING

A. Refer to Contract Drawings and Specification Section 02320 Earthwork for stripping requirements.

B. Stockpile stripped topsoil and suitable soil and rock fill separately on-site or off-site in locations shown on the Contract Drawings and/or as directed by the Engineer.

3.05 EXISTING FENCES

A. Remove existing fences only as necessary to facilitate construction operations, and as approved by the Engineer and Owner.

B. Close immediately and "double-lock" gates/fences after passing through or provide appropriate construction area signage, as approved by the Engineer.

3.06 DUST CONTROL

A. Provide dust control to satisfaction of the Engineer and as noted in Specification Section 02320 Earthwork, 02280 Erosion, Sediment, and Pollution Control, 02290 Stormwater Management, and any related Specifications Sections.

B. All dirt/gravel roads will be wetted as necessary as well as a speed limit of 25 mph maintained to suppress dust and ensure minimal dust-related impacts.

3.07 DISPOSAL OF SPOIL, ROCK AND CEMENTITIOUS WASTE MATERIAL

A. Excavation spoils, excess soil, tunnel muck, rock and cementitious waste material, and concrete waste shall be disposed of off-site in accordance with this Specifications Section and all local, state and federal requirements.

B. The Contractor may stockpile spoils and other materials on-site at locations shown on the Project Drawings (Laydown Areas) prior to proper off-site disposal.

C. All spoils, tunnel muck and waste stockpiles shall be managed in a manner consistent with Section 02280 – Erosion, Sediment and Pollution Control, and Section 02290 – Stormwater Management. Stockpiles shall be covered and fenced to prevent intrusion by animals. Fencing shall be suitable for exclusion of California Tiger Salamander from access to stockpiles. Owner's biological consultant shall "review-and-accept" Contractor's proposed fencing materials.

3.08 DISPOSAL OF DEBRIS AND WASTE

A. Dispose of off-site all inorganic debris, organic waste material, and other waste in accordance with all local, state and federal requirements.

3.09 SITE CONDITIONS AND CLEANUP

A. Keep the Project Site in a neat and orderly condition and follow good "housekeeping" practices.

3.10 FIELD QUALITY CONTROL

A. Refer to Specification Section 02320 Earthwork.

PART 4 - MEASUREMENT AND PAYMENT

4.01 METHOD FOR MEASUREMENT

A. Spoil of soil and rock (earth) from tunnel excavation shall be measured by the cubic yard (CY).

B. Concrete and construction waste shall not be measured.

C. Organic material from surface preparation shall not be measured.

D. Inorganic debris and other organic waste materials shall not be measured.

E. Tons and/or truck counts may be used for measurements if properly measured, calculated, converted and "reviewed-and-accepted" by the Engineer.

4.02 BASIS OF PAYMENT

A. Spoil – soil and rock (earth) removed and properly disposed offsite shall be paid at the Contract unit price basis per cubic-yard (CY) of material.

B. All other Work outlined in this Specification Section is considered incidental, therefore, is not subject for payment or is paid for under another Specification Section.

- END OF SECTION 02210 -

X:\Project\3000_prj\3818R OID Tunnel 8\Reports\Contract Docs_Specs\DIV 02\02210 Site Preservation and Materials Disposal 20210721.docx

Technical Memo
Bumgardner Biological Consulting, dated May 5, 2020

TECHNICAL MEMORANDUM

TO: Emily Sheldon, Oakdale Irrigation District

FROM: Michael Bumgardner, Bumgardner Biological Consulting

SUBJECT: 2020 Reconnaissance-Level Surveys of South Main Canal Tunnel 8 Improvements Project Area of Effect

DATE: 5/5/2020

At the request of the Oakdale Irrigation District (OID), I conducted reconnaissance-level surveys for California tiger salamander (*Ambystoma californiense*) (CTS) and western spadefoot (*Spea hammondii*) (WESP) on April 9 and 13, 2020 within the footprint (i.e., area of effect) of the South Main Canal Tunnel 8 Improvements Project (proposed project). I also evaluated whether western burrowing owl (*Athene cunicularia hypugaea*) has any potential to occur within the area of effect of the proposed project. The April 9, 2020 survey focused on two questions:

1) Could the seasonal ponds/pools within the project area of effect support any special-status species (particularly California tiger salamander or western spadefoot); and
2) Could western burrowing owls utilize the crevices, voids, or California ground squirrel (*Otospermophilus beecheyi*) burrows located in the spoils piles that are aligned along the South Main Canal or elsewhere in the immediate project vicinity (up to 500 feet from project).

The April 9, 2020 survey found that there are three discrete areas that pool water up against the adjacent spoil pile. As such, these are not natural wetlands. If the spoil pile were removed, the ponds would cease to pool. There was also no evidence of vernal pool plants within these ponds other than coyote-thistle (*Eryngium* sp.). However, coyote-thistle is often found in man-made wetlands or even wet soils that never pond.

The 1st survey also found that there is no evidence of burrowing owl in the adjacent spoil pile. Though the crevices, voids, or California ground squirrel burrows located in the spoils pile are accessible to burrowing owls (i.e., are the proper size), no evidence of the species (e.g., urates, regurgitated fur and feather pellets, feathers, prey remains, etc.) was found during the survey. Furthermore, the surrounding grassland is too tall and dense to support burrowing owls. The species has been recorded south of the proposed project in the San Francisco Public Utilities Commission (SFPUC) right-of-way (ROW) during winter surveys conducted by me, but the species appears to disappear from the area during the nesting season since monitoring of the SFPUC ROW and other adjacent areas have failed to find the species during the warmer parts of the year.

The April 13, 2020 survey was conducted as a follow-up to the previous survey on April 9, 2020. Each of the three seasonal pools were dip netted to determine if they were occupied by CTS, WESP; or any other amphibians. No evidence of the two special-status amphibians was found. In addition, the very abundant and widely distributed Sierran treefrog (*Pseudacris sierra = Hyla regilla*) was also not found. The absence of the latter species suggests that the pools are extremely ephemeral and do not last long enough for the species to breed and complete larval development.

Another pond located further west was also sampled during the 2nd survey. This latter pond is perennial given the well-established stands of cattail (*Scirpus* sp.) and tule (*Schoenoplectus acutus*) around the perimeter of the pond. It also supports bullfrogs (*Lithobates catesbeianus*) suggesting that the pond does not typically dry-down completely (i.e., bullfrog larvae require two years to complete development and undergo metamorphosis). The pond was dip netted and no amphibian larvae, other than a small number of Sierran treefrog larvae, were found. It is suspected that bullfrog larvae occupy the pond, but the deepest part of the pond was estimated to be five feet deep and therefore could not be sampled by dipnet and waders. Though not absolute, CTS and WESP are almost never found co-occupying a water feature.

The 2nd survey also evaluated the project site more completely regarding burrowing owl. It was found, consistent with another biological survey of the South Main Canal in 2014, that ground squirrel burrows located near the top of bank of the canal could potentially be occupied by the species. More focused surveys of the burrows that could be directly affected by the proposed rehabilitation of the canal would allow for a finding of absence, but each suitable burrow would need to be backfilled. Note that this cannot be conducted until after August 15 (i.e., after the nesting season) since eggs and juveniles cannot passively relocate. Burrows would be cleared for backfill after three consecutive nights during which an exclusion device was installed in the mouth of the burrow. The exclusion device is often a short length of 5-inch diameter PVC pipe that is jammed into the burrow mouth such that an owl cannot bypass it and move freely into and out of the burrow. A clear plexiglass lid is taped to the outer opening of the pipe such that an owl can see out and eventually figure out how to get out of the burrow. Once the owl leaves, the plexiglass returns to its original position preventing the owl from getting back into the burrow. It is recommended that clearance be conducted within 160 feet of the closet disturbance activities. This distance threshold is consistent with the threshold for non-nesting burrowing owls in the California Department of Fish and Wildlife (CDFW) *2012 Staff Report on Burrowing Owl Mitigation*.

No other special-status species are considered to have any potential to be affected during implementation of the proposed rehabilitation activities associated with Tunnel 8 and adjacent reaches of the canal.

SECTION 02230

CLEARING AND GRUBBING

PART 1 - GENERAL

1.01 SCOPE

A. Specified Work – This Specification Section outlines and specifies the requirements for clearing and grubbing within the limits of the Project work areas. Clearing and Grubbing includes:

1. Removing unsuitable organic and inorganic material, including trees, tree stumps, brush, other vegetation, rocks, concrete rubble, trash and debris.

2. Preparing the specific areas of the Project Site for construction operations.

B. Work Inclusions – The Work shall include all labor, materials, equipment, and incidentals to perform the Work outlined and/or specified in this Specification Section.

1.02 BACKGROUND AND SITE CONDITIONS

A. The Contract Drawings and the Contract Specifications do not specifically show or indicate trees and stumps, vegetative materials, trash piles or other surficial rubbish to be removed and disposed of off-site.

B. The Contractor shall inspect the Project Site and determine the nature, location, size and extent of these materials to be removed and disposed of off-site.

C. The Contractor shall determine the locations of the disposal sites.

1.03 DEFINITIONS

A. Drip Line – The limits established by the outermost tips of the branches of a single plant, bush or tree, or group thereof, projected to the ground in plan view.

B. Clearing – Clearing of grass, brush, trees, stumps, tree roots, debris and otherwise unsuitable material from the ground surface at areas to receive excavation, fill or improvements.

C. Grubbing – The removal of vegetative material greater than one (1) inch in diameter to a depth of twelve (12) inches below the existing ground surface.

D. Vegetative Material – Any portion of a plant, bush or tree.

E. Spoil – Excavated, demolished, or removed inorganic rock, soil, cementitious material or other material.

F. Debris and Waste – Organic and/or inorganic waste and debris.

G. Topsoil – Excavated and reused material graded, free of roots, rocks larger than ½-inch, debris, vegetation and foreign matter.

1.04 SPECIFICATIONS, CODES, STANDARDS AND REPORTS

A. General – Unless otherwise revised, altered, modified and/or stated differently in this Specification Section or Related Work Specification Sections, the Contractor shall comply with the following Specifications, Codes, Standards and Reports, and their latest published edition.

1. State of California, Department of Transportation (Caltrans), Standard Specifications, latest edition, Section 17 "Clearing and Grubbing."

1.05 RELATED WORK SPECIFICATION SECTIONS

01200	Project Management, Administration and Facilities Operation
01250	Quality Control and Assurance
01320	Progress and Schedules
01330	Submittals
02210	Site Preservation and Materials Disposal
02280	Erosion, Sediment and Pollution Control
02290	Stormwater Management
02320	Earthwork

1.06 DESIGN PARAMETERS (NOT USED)

1.07 QUALITY CONTROL AND ASSURANCE REQUIREMENTS

A. General – Refer to General Requirements Specification Section 01250 Quality Control and Assurance.

1.08 SAFETY AND SECURITY REQUIREMENTS

A. Work Compliance – All Work shall be done in compliance with all applicable federal and state safety and health regulations (Fed-OSHA and Cal-OSHA).

B. Applicable Regulations – California Code Regulations, Title 8, Chapter 4 – Division of Industrial Safety Orders (Cal-OSHA), Subchapter 4 – Construction

Safety Orders (Sections 1500 - 1938), and Subchapter 7 – General Industry Safety Orders (Sections 3200 - 6148) are the most applicable regulations for this Section.

C. Engineer and Owner Safety Responsibilities – Both the Engineer and the Owner will perform their Work, e.g., observations, inspections, quality assurance testing, etc., under the Contractors Safety and Health Policies, and Injury and Illness Prevention Program.

1.09 ENVIRONMENTAL REQUIREMENTS AND PERMITS

A. Local dumping permit(s) for organic waste and inorganic debris disposal may be required at landfill(s). The Contractor shall research and secure the permits at no additional cost to the Owner.

B. Inorganic spoil materials shall be disposed offsite.

C. Refer to Specification Section 02210 Site Preservation and Materials Disposal, Section 02280 Erosion, Sediment and Pollution Control, and Section 02290 Stormwater Management.

1.10 CONTRACTOR SUBMITTALS

A. Pre-Construction Phase – The Contractor shall submit the following before the Work outlined in this Specification Section can begin:

1. Materials Disposal Work Plan, with Working Sketches if needed, of organic waste, inorganic debris, and excavated spoil removal and disposal. This plan shall be submitted to the Engineer for “review-and-acceptance.”

2. Dumping permits and Owner/Engineer releases of future responsibility of the wasted material off-site. These documents shall be submitted to the Engineer for “review-and-information.”

PART 2 - PRODUCTS (NOT USED)

PART 3 - EXECUTION

3.01 GENERAL

The Contractor shall execute the following:

A. Perform clearing operations in advance of grubbing.

B. Perform all work described in this Specification Section before surface preparation and placement of concrete, shotcrete, and other improvements. Refer to Specification Section 03470 Shotcrete.

C. Immediately dispose of non-recycled materials removed during clearing and grubbing. Do not burn on-site organic materials that were cleared and grubbed.

D. Do not disturb any area outside the limits of the Work areas. Protect areas outside the limits of the work areas from Contractor operations.

E. Do not utilize vegetative material as anchorages or for other purposes.

F. Prior to cutting or removing tree limbs or roots larger than one and one-half (1½) inches in diameter (for trees to remain), have a licensed tree surgeon or horticulturist inspect and approve cut or removal.

G. Assume all responsibility for injuries to, or death of vegetation arising from Contractor operations (except for trees and vegetation to be removed per drawings or as specified). Perform this Work at no additional cost to the Owner.

1. The term "injuries" in this context shall comprise of any bruising, scarring, or breaking of roots, trunks, or branches.

2. Repair or treat injured vegetation without delay as recommended by and under the direction of an experienced horticulturist or licensed tree surgeon.

3. Replace in kind vegetation that cannot be treated or repaired.

3.02 CLEARING AND GRUBBING

A. Clear and grub within all proposed improvements and five (5) feet beyond the limits of proposed shotcrete on existing exposed ground surfaces.

B. Clear trash piles, surficial rubbish, and fencing, including fence-post footings.

C. Remove branches that are or will be interfering with Contractor operations with the prior approval of the Engineer. Treat cuts larger than one and one-half (1½) inches in diameter with a sealing compound.

D. Remove cleared and grubbed materials that are not to be recycled and dispose of off-site in accordance with all applicable local laws, codes, and ordinances.

3.03 PROTECTION OF VEGETATION

A. Protect vegetative materials that are not cleared.

3.04 FIELD QUALITY CONTROL

A. Refer to Specification Section 02320 Earthwork.

PART 4 - MEASUREMENT AND PAYMENT

4.01 METHOD OF MEASUREMENT

A. The areas that are cleared and grubbed for placement of shotcrete, concrete, or other improvements shall not be measured.

4.02 BASIS OF PAYMENT

A. Work outlined in this Specification Section is not subject for payment or is paid for under another Specification Section.

- END OF SECTION 02230 -

X:\Project\3000_prj\3818R OID Tunnel 8\Reports\Contract Docs_Specs\DIV 02\02230 Clearing and Grubbing 20210721.docx

SECTION 02280

EROSION, SEDIMENT AND POLLUTION CONTROL

PART 1 - GENERAL

1.01 SCOPE

A. Specified Work – This Specification Section outlines and specifies the requirements for:

1. Implementing final erosion control and sediment pollution control measures at the end of construction, which may include, but are not limited to:

   a. Moisture conditioning and "track walking" spoils stockpile and disturbed areas.

   b. Installing final erosion and sediment control facilities such as rock filter dams and riprap.

   c. Installing final biodegradable and biotechnical erosion control facilities.

   d. Seeding, hydroseeding, planting, and straw mulching.

2. Implementing temporary erosion, sediment and pollution control measures in disturbed areas at the Project Site prior to the beginning of the wet weather season where final erosion control measures have not been installed. Measures shall include, but not be limited to:

   a. Installing wattle sediment barriers and/or silt fences at toes of fills, at bases of stockpiles, and at minor drainage discharge locations.

   b. Installing sediment control and desiltation basins in drainage courses.

   c. Placing earth berms above incomplete cut or fill slopes to divert stormwater runoff from the slopes.

   d. Placing temporary diversion ditches or berms.

   e. Placing check dams or filters consisting of coarse aggregate or rock riprap.

f. Placing crushed rock or cobblestone liners in ditches and drainage courses.

g. Hydroseeding or other suitable covering to reduce erosion from earth stockpiles.

B. Work Inclusions – The Work shall include all labor, materials, equipment and incidentals to perform the work outlined and specified in this Specification Section.

1.02 BACKGROUND AND SITE CONDITIONS

A. The Contractor shall arrange for and be responsible for the submittals as required under the Construction General Permit, No. 2009-0009-DWQ, as amended by Order 2010-0014-DWQ and Order 2012-0006-DWQ or subsequent replacement orders. The Owner will review and certify submittals made by the Contractor to the State Water Resources Control Board (SWRCB) via the Stormwater Multi Application Report Tracking System (SMARTS) and pay for fees incurred under the General Permit Order.

B. The Best Management Practices (BMPs) and locations shown on the Contract Drawings for final stabilization are the minimum anticipated. The minimum is based on a reasonable amount of ground surface being disturbed.

C. Refer to Specification Section 02290 Stormwater Management, Article 1.03.

1.03 DEFINITIONS

A. Refer to Specification Section 02290 Stormwater Management, Article 1.03.

B. Fugitive Dust – Particulate Matter (PM) suspended in the air by wind that originates from soil disturbed as a direct result of construction activity, and that is subject to regulation by a local air pollution control district (APCD).

C. Temporary Seeding – The planning of fast-growing grasses to hold down the soils in disturbed areas so that they are less apt to be carried off-site by stormwater runoff or wind.

D. Permanent Planting – The use of permanent vegetation (grass, trees, or shrubs) to stabilize the soil by holding soil particles in place.

E. Mulching – The placement of material such as hay, grass, woodchips, straw, or gravel on the soil surface to cover and hold in place disturbed soils. (Mulching often accompanies seeding.)

F. Hydroseeding – Hydraulic application of seed, fertilizer and mulch.

G. Project Site – Areas occupied by the Contractor, equipment, and materials during mobilization, construction, and demobilization, including the improvement construction areas, staging areas, laydown areas and access ways.

H. Substantial Completion – Date at which the Work defined in the Contract Documents and along the Project Boundary Limits must be completed.

1.04 SPECIFICATIONS, CODES, STANDARDS AND REPORTS

A. General – Unless otherwise revised, altered, modified and/or stated in this Specification Section or Related Work Specification Sections, the Contractor shall comply with the following Specifications, Codes, Standards and Reports, and their latest published edition.

1. "Erosion and Sediment Control Field Manual," Regional Water Quality Control Board (RWQCB), California's Central Valley Regional Water Quality Board – Region 5, latest edition.

2. State of California, Department of Transportation (Caltrans) "Stormwater Quality Handbooks," latest edition.

3. "Manual of Standards for Erosion and Sediment Control Measures," Association of Bay Area Governments, latest edition.

4. "Erosion and Sediment Control Handbook," Goldman, Jackson, Bursztynsky, latest edition.

5. Best Management Practices for Construction, California Stormwater Quality Association, latest edition.

1.05 RELATED WORK SPECIFICATION SECTIONS

01200	Project Management, Administration and Facilities Operation
01250	Quality Control and Assurance
01320	Progress and Schedules
01330	Submittals
02210	Site Preservation and Materials Disposal
02290	Stormwater Management

1.06 DESIGN PARAMETERS (NOT USED)

1.07 QUALITY CONTROL AND ASSURANCE REQUIREMENTS

A. Refer to Specification Section 01250 Quality Control and Assurance.

B. Refer to Specification Section 02290 Stormwater Management, Article 1.07.

1.08 SAFETY REQUIREMENTS

A. Work shall be done in compliance with all applicable federal and state safety and health regulations (Fed-OSHA and Cal-OSHA).

B. California Code Regulations, Title 8, Chapter 4 – Division of Industrial Safety Orders (Cal-OSHA), Subchapter 4 – Construction Safety Orders (Sections 1500 - 1938, and Subchapter 7 – General Industry Safety Orders (Sections 3200 – 6148).

1.09 ENVIRONMENTAL REQUIREMENTS AND PERMITS

A. Refer to Specification Section 02210 Site Preservation and Materials Disposal, Article 1.09, and Section 02290 Stormwater Management, Article 1.07.

B. Owner shall certify Contractor's Notice-of-Intent to comply with the General Permit.

C. All work shall be done in compliance with all applicable federal and state environmental laws and regulations.

1.10 CONTRACTOR SUBMITTALS

A. Pre-Construction Phase

1. Erosion, Sediment and Pollution Control Work Plan – The Contractor shall provide a narrative Work Plan, which incorporates the Contractor's erosion, sediment and pollution control Working Sketches. The Work Plan shall include description and location of erosion, sediment and pollution control devices, measures to mitigate fugitive dust, and methods and means (the Work Plan may be incorporated in the Contractor's SWPPP or WPCP required in Specification Section 02290 Stormwater Management). The Work Plan shall be submitted to the Engineer for "review-and-acceptance."

2. Sediment, Erosion and Pollution Control Working Sketches – The Contractor shall provide Working Sketches and descriptions which, at a minimum, indicate the following. The Working Sketches shall be submitted to the Engineer for "review-and-acceptance."

   a. Sediment, erosion and pollution control methods and components.

   b. Arrangement, location, and layout of system components.

   c. Description of the site-specific methods to be used.

d. Instrument installation, monitoring and maintenance procedures.

e. Methods of disposing accumulated sediments.

3. Product Data – For each type of product or material specified or used.

B. Construction Phase

1. Records

a. Provide to the Engineer for "review-and-information" a narrative inspection report, on a weekly basis or after every storm event, whichever is the most frequent, describing the status of system components, improvements needed, and abatement deadlines.

b. If required by the RWQCB and/or SWPPP, provide results of stormwater monitoring data to the Engineer for "review-and-information."

C. Close-Out Phase

1. Submit the following to the Engineer for "review-and-acceptance":

a. As-built – Provide as-built documentation of final erosion control with Working Sketches.

b. Guarantee – Provide guarantee to repair and/or replace final erosion control products for twelve (12) months after demobilization.

c. Notice-of-Termination as per Specification Section 02290 Stormwater Management.

PART 2 - PRODUCTS

2.01 MATERIALS

A. All materials and components shall conform to the requirements of Article 1.04 "Specifications, Codes, Standards and Reports," in these Specifications and Related Specification Section 02290 Stormwater Management, and as indicated on the Contract Drawings.

B. Temporary and Final Erosion Control Materials

1. Hydroseed: The hydroseed mix shall be based on recommendations from the local office of the United States Department of Agriculture, Natural Resources Conservation Service.

   a. Alternatively, the following seed mix can be used:

Botanical Name **Common Name**	**Percent Germination (Minimum)**	**Kilograms Pure Live Seed Per Hectare (Slope Measurement)**
Lotus purshianus Spanish Clover	40	3.0
Lupinus bicolor Annual Lupine	40	6.0
Eschscholzia californica California Poppy	35	4
Hordeum vulgare var. UC337	80	60.0
Elymus multisetus Big Squirreltail	30	5.0
Hordeum. californicum (California Barley)	40	6.0
Leymus triticoides Creeping Wildrye	35	5.0
Poa secunda ssp. *secunda* Pine Bluegrass	30	5.0
Deschampsia elongata Slender hairgrass	40	6.0

   b. The seed shall be applied in the following hydroseed mixture:

Material	Kilograms Per Hectare (Slope Measurement)
Fiber	320
Seed	100
Compost	940

2. Seed: All seed shall be in conformance with the California State Seed Law of the Department of Agriculture. Each seed bag shall be delivered to the site sealed and clearly marked as to species, purity, percent germination, dealer's guarantee, and dates of test. The container shall be labeled to clearly reflect the amount of Pure Live Seed (PLS) contained. All legume seed shall be pellet inoculated. Inoculant source shall be species specific

and shall be applied at a rate of two (2) pounds of inoculant per 100 pounds of seed.

Seed shall conform to the provisions in Caltrans Standard Specification Section 21-2.02F.

3. Hydraulic Mulch:

   a. Tackifier shall conform to the provisions in Caltrans Standard Specification Section 21-2.02E, "Tackifier," and these special provisions. Tackifier shall be nonflammable, non-toxic to plants and animals, shall have no growth or germination inhibiting factors, and shall have an effective life of at least one (1) year.

   b. Fiber shall conform to the provisions in Caltrans Standard Specification Section 21-2.02D, "Fiber," and these special provisions. Fiber shall be long strand, virgin wood fibers, thermo-mechanically defibrated from clean whole wood chips, containing a minimum of 25 percent of the fibers averaging 10 mm long, with a minimum of 50 percent or more retained on a #24 mesh screen. The wood chips shall be processed in such manner to contain no lead paint, printing ink, varnish, petroleum products, or seed germination inhibitors. Fiber shall not be produced from recycled material such as sawdust, paper, cardboard, or chlorine bleached paper mill residue. A coloring agent shall be included and shall be biodegradable and non-toxic.

4. Rip Rap: Caltrans Standard Specification Section 72.

5. Crushed Rock: Caltrans Standard Specification Sections 19, 20, 37, 72, 78 or 90 depending on use.

6. Cobblestone: Aggregate (rocks) greater than 64 mm in least dimension and less than 256 mm in the greatest dimension, typically 11 kg to 34 kg.

7. Coarse Aggregate: Caltrans Standard Specification Sections 19, 20, 37, 72, 78 or 90 depending on use.

8. Dust Palliatives: Any approved fugitive dust suppressant, including water, or any chemical acceptable by the local APCD.

9. Straw Wattles (Fiber Rolls): Straw wattles are manufactured from straw wrapped in tubular black plastic netting. They are approximately 8 to 9 inches (200 mm) in diameter by 25 to 30 feet (8 to 9 m) long. Rolls are placed and staked along the contour of newly constructed or disturbed slopes.

a. California Straw Works Straw Wattles™ (or equal) shall be used and are manufactured from rice straw and are wrapped in a tubular plastic netting to the following specification:

1. The netting shall have a strand thickness of 0.03 inches and a knot thickness of 0.055 inches and a weight of 0.35 ounce per foot (each ±10 percent) and shall be made from 85 percent high density polyethylene, 14 percent ethyl vinyl acetate and 1 percent color for UV inhibition. Straw wattles shall be 9 inches in diameter (±1 inch), 25 feet long (± 0.5 feet) and weigh approximately 35 pounds (± 10 percent).

10. Silt Fence: Silt fence fabric will be woven polypropylene with a minimum width of 36 inches and a minimum tensile strength of 1,000 lbs force. The fabric will conform to the requirements in ASTM designation D4632 and will have an integral reinforcement layer. The reinforcement layer shall be a polypropylene, or equivalent, net provided by the manufacturer. The permittivity of the fabric shall be between 0.1 sec-1 and 0.15 sec-1 in conformance with the requirements in ASTM designation D4491.

11. Filter Fabric: Filter Fabric shall be a woven, slit film fabric. The fabric shall be non-biodegradable, resistant to deterioration by sunlight, and inert to most soil chemicals. Edges of the film fabric shall be selvage or serge to prevent unraveling. The film fabric shall also conform to the following requirements**:**

Specification	Requirements
Grab tensile strength (25-mm grip), kilonewtons, minimum ASTM Designation: D4632*	0.89
Elongation at break, percent, minimum ASTM Designation: D4632*	15
Toughness, kilonewtons, minimum (percent elongation x grab tensile strength)	13.3
Permittivity, 1/sec, maximum, (liters per minute per square meter) ASTM Designation: D 4491	0.08 (244)
Ultraviolet light stability, percent tensile strength retained after 500 hours, minimum ASTM Designation: D 4355 (xenon arc lamp method)	70

* or appropriate test method for specific polymer

a. Temporary cover fabric shall be manufactured from polyethylene or polypropylene, or comparable polymers. The polymer materials may be virgin, recycled, or a combination of virgin and recycled materials. The polymer materials shall not contain biodegradable filler materials that can degrade the physical or chemical characteristics of the finished fabric.

2.01 CONSTRUCTION FACILITIES AND EQUIPMENT (NOT USED)

2.02 TEMPORARY FACILITIES (NOT USED)

PART 3 - EXECUTION

3.01 GENERAL

The Contractor shall execute the following:

A. Provide and install all the erosion sediment and pollution control measures in accordance with:

1. This Specifications and Related Specifications.

2. The Contract Drawings.

3. RWQCBs Erosion and Sediment Control Field Manual.

4. Caltrans Stormwater Quality Manuals and Handbooks.

B. Follow the Contractor's SWPPP or WPCP and, if not incorporated with SWPPP, Erosion, Sediment and Pollution Control Work Plan and Working Sketches, as "reviewed-and-accepted" by the Engineer.

C. Maintain in proper and reasonable condition the temporary erosion, sediment and pollution control from Notice-to-Proceed to Final Completion when the Project is accepted by the Engineer and the Owner.

D. Protect the Project Site, adjacent lands and water courses from damage and or adverse environmental impacts resulting from erosion, sedimentation and other project generated pollutants.

3.02 HYDRAULIC MULCH APPLICATION

The Contractor shall execute the following:

A. Temporary hydraulic mulch (bonded fiber matrix) shall be applied to active and non-active areas where the soil is moist to a minimum depth of 10 mm. Prior to applying temporary hydraulic mulch (bonded fiber matrix), water shall be applied to areas that lack sufficient soil moisture. Water shall be applied with hydro-seeding equipment in a uniform manner using the proper nozzle to disperse the flow such that the soil surface is wetted to a minimum depth of 10 mm. Water application shall not generate excessive run-off or create erosion.

B. The following mixture in the proportions indicated shall be applied with hydroseeding equipment. Successive applications shall be used to achieve the indicated rate:

Material	**Kilograms Per Hectare (Slope measurement)**
Bonded Fiber*	4,000

*Includes fiber and emulsion material (solids)

C. The dilution of bonded fiber (kilograms) to water (liter) per hectare shall be as required to facilitate even application of material.

D. Materials shall be applied to form a continuous mat covering one hundred percent (100%) of the soil surface, shall have a minimum thickness of 3 mm, and shall have no gaps between the mat and the soil surface.

E. Materials shall be applied from two (2) or more directions to avoid shadowing effects and achieve a continuous mat.

F. Materials shall be applied in successive layers to avoid slumping and to aid drying.

G. Materials shall be applied during dry weather and with a minimum of twenty-four (24) hours of dry weather predicted between completion of materials application and anticipated rain.

3.03 OTHER POLLUTANT CONTROL MEASURES

The Contractor shall execute the following:

A. Address other potential sources of pollution on the Project Site(s), i.e., solid and liquid and chemical wastes.

B. Comply with applicable local, state and federal regulations and requirements for pollution control.

C. Ensure proper disposal of construction-site waste materials.

D. Treat or properly dispose of wastes that are generated on the Project Site(s).

E. Prevent off-site tracking of mud or sediments. Stabilized construction entrances or vehicle washing racks should be installed where vehicles leave the site.

F. Identify and prevent contamination of non-stormwater discharges. Where non-stormwater discharges allowed by the General Permit exist, they must be identified and steps must be taken to prevent contamination of these discharges.

G. Where dust may be a problem, implement dust control measures such as irrigation, truck watering, palliatives, etc.

H. Prevent leakage into the ground of or, if leakage occurs, collect and dispose of properly hydrocarbons – fuel, oil and grease (FOG) – and synthetic organic compounds.

3.04 FIELD QUALITY CONTROL

The Contractor shall execute the following:

A. If required by RWQCB and/or the General Permit, monitor, i.e., sample, test and analyze and report, the water quality and the water flows at the points shown on the Contract Drawings and/or elsewhere as directed by the Engineer.

B. On a weekly basis or after each storm event, whichever is more frequent, inspect, maintain and, as required, repair or replace the erosion, sediment and control devices, components and/or measures. Mitigate damaged measures during the storm event. Make improvements and repairs/replacements expeditiously before the next storm event.

C. Monitor the performance of the erosion, sediment and pollution control measures during storm events. (If able, make adjustments and improvements during the storm: if unable, before the next storm event.)

3.05 FINAL STABILIZATION

The Contractor shall execute the following:

A. Repair, replace or relocate the previously installed, temporary erosion, sediment and pollution control measures to benefit final stabilization and/or as directed by the Engineer.

B. Perform the final stabilization, as indicated on the Contract Drawings and/or as directed by the Engineer.

C. If the disturbed areas of the Project Site(s) will not be re-disturbed for three (3) weeks, or if the last planned disturbance of the site(s) will occur after two (2) weeks, start final stabilization immediately after those periods of time.

D. Provide close-out phase submittals: as per Article 1.10.C of this Specification Section.

PART 4 - MEASUREMENT AND PAYMENT

4.01 METHOD FOR MEASUREMENT

A. Temporary and final erosion, sediment and pollution control measures will not be measured for payment, except those items of Work addressed in Specification Sections 02290 Stormwater Management and 02210 Site Preservation and Materials Disposal.

4.02 BASIS OF PAYMENT

A. The Contractor will not receive additional payment for temporary and final erosion, sediment and pollution control measures and shall be considered incidental to the Work, unless otherwise as allowed by the Engineer.

B. If a jurisdictional agency levies fines and requires additional and/or replacement, repair and/or relocation of erosion, sediment and pollution control measures resulting from the Contractor's ground disruption, the Contractor shall pay the fines and the control measures at no cost to the Owner.

C. All other Work outlined in this Specification Section is considered incidental; therefore, not subject for payment, or is paid from under another Specification Section.

- END OF SECTION 02280 -

X:\Project\3000_prj\3818R OID Tunnel 8\Reports\Contract Docs_Specs\DIV 02\02280 Erosion, Sediment and Pollution Control 20210721.docx

SECTION 02290

STORMWATER MANAGEMENT

PART 1 - GENERAL

1.01 SCOPE

A. Work Specified – This Specification Section outlines and specifies the requirements for the design, installation, inspection, maintenance and removal of facilities for stormwater management. Stormwater management provisions and requirements are included in Contract Document Section 00100 Project Description. Stormwater facilities include, but are not limited to, stormwater flood prevention and handling drainage, dewatering, and sediment and erosion control facilities and systems, which are compatible with and support construction methods and means as necessary to properly and safely conduct surface operations described below in Article 1.05 of this Specification Section. The Work includes concrete and spoils waste management. The Work also includes, if required, sampling and testing of water flow and quality along Project-affected water courses.

B. Work Inclusions – The Work includes all labor, equipment, materials for the installations, inspections and maintenance, sampling, testing and analysis, operation and removal of stormwater, pollution prevention and handling temporary drainage and dewatering systems, monitoring, evaluation programs, and erosion and sediment control measures for the control and disposal of surface and ground waters.

1.02 BACKGROUND AND SITE CONDITIONS

A. Each year from November 1 through February 28 the District discontinues diversion, i.e., valves off, the irrigation water flows in the South Main Canal. The South Main Canal is placed in its “Dry-Canal” condition. This “Dry-Canal” condition period coincides with California’s stormy, wet season. Stormwater run-off from the upslope watershed enters the South Main Canal at various locations.

B. The project construction activities are subject to the National Pollutant Discharge Elimination System (NPDES) under the 1972 Federal Clean Water Act and subsequent revisions. The construction activities, which are included in the NPDES, are ground clearing, grading, excavation of soil and rock, stockpiling, and other soil disturbances that are at least one (1) acre of total area. Also, if the construction activities significantly impair the water quality, even if the disturbance area is less than one (1) acre, the Project is subject to the NPDES. Construction activities that are routine maintenance to maintain original line and grade, original hydraulic capacity, or the original purpose of the facility, and that are emergency

construction activities to protect public health and safety are not subject to the NPDES. Emergency measures are responses to rapidly deteriorating conditions and do not include planned repairs.

C. If construction activities are subject to the NPDES, the Contractor shall comply with the General Construction Stormwater Permit (General Permit) under California's Water Quality Order 2009-0009-DWQ, as amended by Order 2010-0014-DWQ and Order 2012-0006-DWQ or subsequent replacement orders. The Contractor must provide a Draft Stormwater Pollution Prevention Plan (SWPPP) to the Owner through the Engineer for "review-and-comment." The Contractor must incorporate Engineer's comments in a Final SWPPP.

D. If the construction activities are not subject to the NPDES, the Contractor must provide and submit a Water Pollution Control Program (WPCP) to the Engineer for "review-and-acceptance."

E. The Engineer has confirmed that the Project is subject to the NPDES. Therefore, a SWPPP is required and the Contractor will file a Notice of Intent (NOI) to comply with the General Permit for Stormwater Discharges Associated with Construction Activity. The Contractor must comply with the General Permit and all other permits obtained by for this Work, including preparation of SWPPP. The Owner will provide certification of the NOI after submittal to the Stormwater Multi Application Report Tracking System (SMARTS) program.

F. The Project is within the Central Valley State Regional Water Control Board (RWQCB), Region 5. Their Sacramento Area Office is at 11020 Sun Center Drive #200, Rancho Cordova, CA 95670, telephone (916) 464-3291, fax (916) 464-4645, web-site www.waterboards.ca.gov/centralvalley.

G. All water run-off within the Project construction limits will be within the lower Stanislaus River watershed which is a 303(d) listed stream for Diazinon, Group A pesticides, mercury and unknown toxicity, but is not listed for sedimentation, siltation, and/or turbidity. Contractor will be responsible for damages, fines and penalties related to discharges to the natural drainages leading to the Stanislaus River. Though not specifically listed as 303(d) water bodies, these waters may nonetheless require monitoring and water quality sampling for other constituents under the existing or anticipated new General Permit, or as required by State Water Resources Control Board Resolution No. 2001-046.

H. Site conditions for stormwater management that will be provided by the Owner, and requirements for constructing, maintaining, and removing stormwater and canal facilities are included in Contract Documents Section 00100 Project Description.

1.03 DEFINITIONS

A. Project Right-of-Way Limits – Generally, the Project right-of-way limits are 50 feet on each side from the canal center line.

B. Project Construction Limits – As shown on the Contract Drawings, or the Project Right-of-Way if none shown.

C. Rain and Drain Days – Days with enough precipitation and storm duration to result in run-off drainage.

D. Canal – The Oakdale Irrigation District South Main Canal and associated facilities, including tunnels, laterals and diversion facilities.

E. "Dry-Canal" Condition and Season – Annually from November 1 until February 28.

F. Direct Discharge – Stormwater run-off that flows from a construction site directly into a "sensitive 303(d) listed water body" for sedimentation, siltation, and/or turbidity. Stormwater run-off from the Project Site is considered a direct discharge to a "sensitive 303(d) listed water body" unless it first flows through:

1. A municipal separate storm sewer system that has been formally accepted by and is under control and operation of a municipal entity;

2. A separate stormwater conveyance system where there is co-mingling of site stormwater with off-site sources; or

3. A tributary or segment of a water body that is not listed on the 303(d) list before reaching the "sensitive 303(d) listed water body" or segment.

G. Discharger – The person or entity subject to the NPDES and the General Permit.

H. Engineer – A Registered Professional Engineer, employed as the Owner's representative.

I. Field Measurements – Water flow and quality testing performed in the field, using temporary installed and/or portable field-testing kits or meters.

J. pH – pH universal expression used to indicate the intensity of the acid or alkaline condition of a water sample. The pH of natural waters tends to range between 6 and 9, with neutral being 7. Extremes of pH can have deleterious effects on aquatic systems.

K. Sampling and Analysis Plan – A document that describes how the samples will be collected and under what conditions, where and when the samples will be collected,

what the sample will be tested for, what test methods and detection limits will be used, and what methods/procedures will be maintained to ensure the integrity of the sample during collection, storage, shipping and testing (i.e., quality assurance/quality control protocols).

L. Sediment – Solid particulate matter, both mineral and organic, that is in suspension, is being transported, or has been moved from its site of origin by air, water, gravity, or ice and has come to rest on the earth's surface either above or below sea level.

M. Sedimentation/Siltation – The process of sediment/silt deposition.

N. Settleable Solids (SS) or Materials – The solid material that can be settled-out in water during a specified time frame. This action is typically tested by placing a water sample into an Imhoff settling cone and allowing the solids to settle by gravity. Results are reported either as a volume (mL/L) or a weight (mg/L).

O. Silt – Soil particles between 0.05 mm and 0.002 mm in size. (For the purpose in this Specification Section only, it also includes clay, which is categorized by a particle size less than 0.002 mm.)

P. Soil Amendment – Any material that is added to the soil to change its chemical properties, engineering properties, or erosion resistance that could become mobilized by stormwater. Certain soil amendments may not be visible in site water run-off. Soil amendments likely to fall in this category include, but are not limited to lime, cementitious waste material, cementitious binders, chlorides, emulsions, polymers, soil stabilizers, and tackifiers applied as a stand-alone treatment (i.e., without mulch). Even some of these products may bind with the paper fibers (such as mulches and matrices), bark or wood chips, green waste or composted organic materials, and biodegradable or synthetic blanket fibers are soil amendments that are likely to be visible in stormwater run-off.

Q. Suspended Sediment Concentration (SSC) and Suspended Material – The concentration or amount of suspended solid material in a water sample by measuring the dry weight of all of the solid material from a known volume of a collected water sample. Results are reported in mg/L.

R. Total Suspended Solids (TSS) – Suspended solids in a water sample include inorganic substances, such as soil particles and organic substances, such as algae, aquatic plant/animal waste, particles related to industrial/sewage waste, etc. The total suspended solids test (TSS) measures the concentration of suspended solids in water by measuring the dry weight of a solid material contained in a known volume of a sub-sample of a collected water sample. Results are reported in mg/L.

S. Turbidity – Cloudiness of water quantified by the degree to which light traveling through a water column is scattered by the suspended organic and inorganic

particles it contains. The scattering of light increases with a greater suspended load. Turbidity is commonly measured in Nephelometric Turbidity Units (NTU).

T. Check Dam – An engineered structure across a water course, constructed of rock, soil or other materials, designed to trap sediments; also, a watertight engineered earthen manufactured structure that acts like a coffer dam or diversion dam.

U. Residual Water – Precipitation that ponds in low areas or otherwise does not run off the Site.

V. Stormwater – Precipitation that runs on to and off of the Project Site.

W. Ground water – Water that is naturally contained within the ground.

X. Construction Water – Water that is used for construction purposes or the result of altered stormwater as a result of construction activities.

Y. Surface Water – Water that is naturally occurring at the ground surface.

Z. Storm or Pump Watch – Contractor personnel assigned to visually observe stormwater run-off that may affect the Project Site during and/or following significant precipitation events, and the performance of temporary stormwater facilities.

AA. Best Management Practices (BMP) – A practice or combination of practices considered by the State of California to be the most effective means (including technological, economic and institutional considerations) of preventing or reducing the amount of pollution by non-point sources to a level compatible with water quality goals.

BB. Best Available Technology (BAT) – Industry standard for stormwater management.

CC. Best Conventional Pollutant Control Technology (BCT) – industry standard for pollution control.

DD. Construction General Permit (General Permit) – permit issued as required by the State Water Resources Control Board (SWRCB) No 2009-0009-DWQ, as amended by Order 2010-0014-DWQ and Order 2012-0006-DWQ or subsequent replacement orders prior to end of construction activities.

EE. Notice-of-Intent (NOI) – Form required to comply with the terms of the General Permit to discharge stormwater associated with construction activities.

FF. California Regional Water Quality Control Board (RWQCB) – California State agency – Central Valley State Regional Water Control Board, Region 5. Their

Sacramento Area Office is at 11020 Sun Center Drive, No. 200, Rancho Cordova, CA 95670, phone (916) 464-3291, fax (916) 464-4645, website: www.waterboards.ca.gov/centralvalley.

GG. California State Water Resources Control Board (SWRCB) – California State agency - Division of Water Quality, Stormwater Section 1001 I Street, PO Box 100, Sacramento, CA 95814, phone (916) 341-7365, fax (916) 341-5252, website: www.waterboards.ca.gov.

HH. National Pollutant Discharge Elimination System (NPDES) – National pollutant discharge elimination system under the 1972 Federal Clean Water Act.

II. Final Stabilization – All soil disturbing activities at the site have been completed, and that a uniform perennial vegetative cover with a density of seventy percent (70%) of the cover for unpaved areas not covered by permanent structures has been established or equivalent permanent stabilization measures (such as the use of riprap, gabions, or geotextiles) have been employed.

JJ. Notice-of-Termination (NOT) – A notice submitted to RWQCB when the Project Site(s) have been finally stabilized or when a Contractor of a construction activity changes. Information to be included on the NOT includes the location of the construction site; the name, the address, and telephone number of the Contractor terminating coverage; the General Permit number; an indication of why coverage under the permit should be terminated for the Contractor; and a signed certification statement.

KK. Retention Pond – A reservoir without water run-off release except by means of evaporation, infiltration, or emergency bypass.

LL. Detention Pond – A basin that holds or detains water run-off for a limited time releasing it slowly to allow most of the sediments to drop out.

MM. Infiltration Measures – Measures that allow the percolation of water though the ground surface into subsurface soil. Specific measures include infiltration trenches, basins, and dry wells.

NN. Vegetated Swales and Natural Depressions – Grass lined ditches or depressions that transport water run-off, filter sediments from the water run-off, and enhance infiltration of the water run-off.

OO. Earth Dike – A mound of stabilized soil, which is constructed to divert run-off. Earth dikes may be used to either divert uncontaminated run-off away from disturbed areas or to divert contaminated run-off into a sediment basin or sediment trap.

PP. Silt Fence – A temporary measure consisting of posts with filter fabric stretched across the posts and sometimes with a wire support fence. The fence is installed along the downslope or sideslope perimeter of a disturbed area. Run-off passes through the openings in the fabric, while sediment is trapped on the uphill side.

QQ. Sediment Trap – An excavated pond or an earthen embankment across a low area or drainage swale. It has an outlet or spillway made of large stones or aggregate. The trap retains the run-off long enough to allow the silt to settle out.

RR. Siltation Basin or Pond – A settling pond with a controlled water release structure, e.g., a riser and pipe outlet with a gravel filter, which slows the release of run-off. The basin detains sediment-laden run-off from larger drainage areas long enough to reduce sediment loading to acceptable levels.

SS. Environmental Protection Supervisor (ESP) – The Contractor's designated person in charge of the SWPPP implementation.

1.04 SPECIFICATIONS, CODES, STANDARDS AND REPORTS

A. General – Unless otherwise revised, altered, modified or stated in this Specification Section and/or Related Work Specification Sections, the Contractor shall comply to the following Specifications, Codes, Standards and Reports, and their latest published edition:

1. California State Water Resources Control Board (SWRCB), Water Quality Order No. 2009-0009-DWQ or subsequent replacement orders, General Permit for Stormwater Discharges Associated with Construction Activity (General Permit) for the National Pollutant Discharge Elimination System (NPDES) or subsequent replacement orders.

2. California Code of Regulations, Title 23 Water.

3. State of California, Department of Transportation (Caltrans), Standard Specifications for Stormwater Quality Handbooks, latest editions.

   a. Stormwater Pollution Prevention Plan (SWPPP) and Water Pollution Control Program (WPCP) Review Guidance Manual, December 2003 (CTSW-RT-03-102.31.30-1).

   b. Stormwater Pollution Prevention Plan (SWPPP) and Water Pollution Control Program (WPCP) Preparation Manual, latest edition.

   c. Construction Site Best Management Practices (BMPs) Manual, latest edition.

d. Construction Site Stormwater Quality Sampling Guidance Manual (CTSW-RT-03-116.31.30).

4. State of California, Department of Transportation (Caltrans), Standard Specifications, latest edition.

a. Guidance for Temporary Soil Stabilization, latest edition.

b. Field Guide for Construction Site Dewatering, latest edition.

5. California Stormwater Quality Association.

a. Stormwater Best Management Practice (BMPs) Handbook, Construction, latest edition.

1.05 RELATED WORK SPECIFICATION SECTIONS

01200	Project Management, Administration and Facilities Operations
01250	Quality Control and Assurance
01320	Progress and Schedules
01330	Submittals
02050	Mobilization and Demobilization
02210	Site Preservation and Materials Disposal
02230	Clearing and Grubbing
02280	Erosion, Sediment and Pollution Control
02320	Earthwork
03300	Concrete Cast-in-Place
03470	Shotcrete

1.06 DESIGN PARAMETERS

A. The SWPPP (Plan) or the WPCP (Program), whichever is required, shall be designed in accordance with the Stormwater Quality Handbooks and meet the provisions required by SWRCB Water Quality Order No. 2009-0009-DWQ or subsequent replacement orders.

B. The Contractor shall design a Plan or Program, which avoids mixing stormwater with non-stormwater, e.g., groundwater, surface water, canal residual water and construction water, to the maximum degree possible for the specified improvements.

C. The following type plans and measures shall be part of the overall Plan or Program:

1. Drainage and dewatering plans and schemes.

2. Erosion and sediment controls, measures and plans.

3. Concrete waste management.

4. pH control of discharged water.

5. Spoil stockpiling and removal.

D. Any Check Dams over four (4) feet in height temporarily constructed in the Canal shall be designed by a licensed Civil Engineer registered in the State of California and shall be designed according to the following parameters:

1. Able to withstand overtopping.

2. Have an overtopping spillway.

3. Have a low elevation outlet within the canal.

4. Able to release outlet under water pressure and stormy conditions.

5. Have an impervious dam core.

E. The Plan or Program with calculations/assumptions and Working Sketches shall be stamped by the Contractor's professional engineer and shall be submitted to the Engineer for "review-and-acceptance."

1.07 QUALITY CONTROL AND ASSURANCE REQUIREMENTS

A. Environmental Protection Supervisor

1. The Contractor shall have on-site on a full-time basis an Environmental Protection Supervisor (EPS). This person shall be in charge of stormwater management, site environmental protection, drainage and dewatering, erosion, sediment and pollution control, and concrete and spoil waste management activities associated with the Project.

2. The EPS shall oversee and enforce the BMPs for stormwater management, site environmental protection, drainage and dewatering, erosion, sediment and pollution control, and concrete and spoil waste management, and oversee the execution of the SWPPP.

3. The EPS shall have at least three (3) years' experience with SWPPPs and/or WPCPs, stormwater, drainage, dewatering, and erosion/sediment controls and measures. The EPS shall also have experience with concrete waste and soil spoils management. The EPS should have experience with water quality monitoring and flow measuring.

4. The on-site EPS may have other collateral responsibilities on the Project.

5. The EPS shall have direct communications privileges to the Contractor's Corporate Officer in charge of environmental and/or environmental protection matters, and not be subordinated by the Contractor's Project Manager.

B. Refer to Specification Section 01250 Quality Control and Assurance.

1.08 SAFETY REQUIREMENTS

A. All Work shall be done in compliance with all applicable federal and state safety and health regulations (Fed-OSHA and Cal-OSHA).

B. California Code Regulations, Title 8, Chapter 4, Division of Industrial Safety (Cal-OSHA), Subchapter 4 – Construction Safety Orders (Sections 1500 – 1938) and Subchapter 7 – General Industry Safety Orders (Sections 3200 – 6148), are the most applicable regulations for this Specification Section.

C. OID/Tri-Dam – Canal irrigation water lock-out procedures at Goodwin Dam.

D. OID Safety Policy.

1.09 CONTRACTOR SUBMITTALS

A. Pre-Construction Phase

1. Stormwater Pollution Prevention Plan (SWPPP or Plan)

a. The Contractor shall submit an NOI through the SMARTS Program for certification by the Owner. The Owner shall certify the submittal and pay the appropriate fees to the SWRCB to obtain coverage under the General Permit. Upon securing the General Permit, a copy shall be provided to the Contractor for "review-and-acknowledgement."

b. As outlined in the General Permit, the Contractor shall develop and submit to the Owner or Engineer a Project specific SWPPP. The Plan shall incorporate the Contractor's BMPs using the BATs and the BCTs for stormwater management, drainage and dewatering, erosion and sediment control, and concrete and spoil waste management to meet the requirements of the NPDES and NOI.

c. The Plan shall include provisions to manage stormwater flows as specified in Contract Document Section 00100 Project Description.

d. The Contractor shall, and is encouraged to, include an appropriate number of Working Sketches of plans, profiles, elevations, details

and diagrams showing the various environmental control systems to be used.

e. Upon approval of the SWPPP by the Owner/Engineer, the Contractor shall provide an electronic (PDF) copy of the approved SWPPP to the Engineer.

f. The SWPPP shall be "reviewed-and-accepted" by the Owner/Engineer prior to the performing any Work specified in this Specification Section and Related Work Specification Sections.

2. Stormwater Management

a. Check Dam designs, including calculations/assumptions and Working Sketches, as described in Articles 1.06.D of this Specification Section.

b. Drainage and Dewatering – The Contractor shall develop and provide a SWPPP, which, at a minimum, indicate the proposed type(s) of dewatering system; the arrangement, location, and depths of systems components; a complete description of equipment and instrumentation to be used, with installation, operation and maintenance procedures; and the methods of disposal of pumped water. SWPPP shall fully address the requirements of any permits obtained by the Owner from state or federal agencies.

c. Erosion, Sediment and Pollution Control – The Contractor shall develop and provide a SWPPP, which, at a minimum, indicate the proposed erosion, sediment and pollution control methodologies and components; the arrangement, location and layout of the systems' components; a complete description of the site-specific methodologies to be used, with installation monitoring and maintenance procedures, and the methods of disposal of accumulated sediments and pollutants. SWPPP shall fully address the requirements of any permits obtained by the Owner from state or federal agencies.

d. Concrete and Spoil Waste Management – The Contractor shall develop and provide a SWPPP, which, at a minimum, indicate the proposed methodologies and components of concrete and spoil waste management; the arrangement, location, and layout of systems components; a complete description of the site-specific methodologies to be used, with installation, monitoring and maintenance procedures, and the methods of disposal of accumulated cementitious and soil sediments and stockpiling, hauling, and dumping spoils, specifically include concrete transit

truck wash-outs. SWPPP shall fully address the requirements of any permits obtained by the Owner from state or federal agencies.

3. Monitoring Programs

a. If required by the SWRCB, the Contractor shall develop and provide to SWRCB with their SWPPP, via the SMARTS Program, a Monitoring Program for sedimentation, siltation, and non-visually detected pollutants.

b. If required by SWRCB or the Engineer, the Contractor shall develop and provide to SWRCB and/or the Engineer, a measuring program for peak flow velocities and total flow quantities for storm events.

c. As part of the Contractor's SWPPP or WPCP, develop and provide a site inspection program. The program shall include the following aspects:

i. Proper installation and maintenance of BMPs (pre-storm or weekly inspections).

ii. Adequately functioning BMPs (inspect post-storm and during extended storm events).

d. The Contractor shall develop and submit a sample form to document site inspections of BMPs. The form must have, but not is not limited to, the following information: inspection date/time, "pump watch" hours before, during and after each storm event, the storm's duration and magnitude, location and type of BMPs inspected, their condition (good, fair, poor or failed), Contractor's inspector(s) accompanying Engineer's observations, and certification statement and signature line.

4. For firms and persons specified in General Requirements Specification Section 01250 Quality Control and Assurance to demonstrate their capabilities and experience, specifically including the EPS. Include lists of completed projects with project names and addresses, names and addresses of engineers and owners, and other information specified.

B. Construction Phase

The Contractor shall submit the following records to the Engineer:

1. Records

a. BMP Site Inspection Records – On a weekly basis or every storm event (before, during and after), the results of BMP Site Inspections.

b. Water Flows – If required by the Project's SWPPP, the SWRCB, the RWQCB and/or the Engineer, measurements of peak stormwater flow (GPM) and total flow (MGal) for each storm event at key locations.

c. SWRCB Monitoring Data – If required by the Projects SWPPP, the SWRCB, the RWQCB and/or the Engineer, results of sampling, testing and analysis of water quality at key locations.

2. Temporarily constructed check dams added during construction and that are over four (4) feet high – the Contractor shall submit designs for the Engineer's "review-and-acceptance."

3. Revisions and As-Built documents – The Contractor shall prepare and submit revisions to previous submittals and reports of as-built conditions as required or as requested by the Engineer.

C. Close-Out Phase – The Contractor shall submit to the SWRCB via the SMARTS program a Notice-of-Termination upon completion of final stabilization for certification by the Owner.

1.10 SPECIAL CONDITIONS AND REQUIREMENTS

A. Special conditions and requirements for Stormwater Facilities and Maintenance are included in Contract Document Section 00100 Project Description.

B. The Owner suspends discharging irrigation water into the canal by November 1 annually. Water ponds in portions of the canal and tunnel during the "Dry Canal" season. The Contractor shall drain residual water as needed before proceeding with the Work. The Contractor shall maintain the canal and tunnel work areas in reasonable "dry" condition of residual, storm, surface, ground and construction water during Work construction. All work shall be in compliance with requirements of all permits obtained by the Owner from state and federal agencies.

C. Clean stormwater collecting in the canal may be conveyed through the Project right-of-way limits. Where necessary and "reviewed-and-accepted" by the Engineer, residual and stormwater may also be released into natural drainage courses consistent with the conditions and requirements listed in this Specification Section.

D. Unusual storm events (i.e., greater than 10-year recurrence interval) stormwater flows may exceed temporary diversion capacity. During such an occurrence, stormwater may flow through the canal work areas.

E. The Contractor shall keep close attention to short- and long-term weather forecasting and shall schedule the Work accordingly. The weather will be an essential element for the Contractor to use in planning construction activities.

F. The Contractor may have to curtail construction activities during major storm events.

G. For large stormwater inflows, the release and pump capacities required may be excessive. Therefore, the check dam arrangements shall be able to withstand overtopping.

H. All releasing and pumping water out of the canal shall follow the requirements stipulated in Article 1.09 of this Specification Section.

PART 2 - PRODUCTS

2.01 TEMPORARY MATERIALS AND EQUIPMENT

A. Furnish and maintain all materials, tools, equipment, facilities, and services as required for stormwater management: drainage control, dewatering measures, erosion and sediment control, and pollutant release prevention.

B. If required by the General Permit, provide equipment for monitoring water discharge amounts and sedimentation, siltation, non-visually detected pollutants (turbidity, pH, etc.) levels and other instruments and measuring devices, as required, in downstream drainage courses and within and outside of the canal.

2.02 PERMANENT MATERIALS

A. Refer to Specification Section 02280 Erosion, Sediment and Pollution Control.

PART 3 - EXECUTION

3.01 PREPARATION

A. Prepare and submit a SWPPP.

B. Select and submit the qualifications of the EPS.

C. Design and submit the required design of check dams and barriers over four (4) feet high.

D. Educate and train supervisors, employees, Subcontractors and suppliers on BMPs and procedures for stormwater management, drainage and dewatering, erosion, sediment and pollutants control, and concrete and spoil waste management.

E. Hold pre-work joint meeting with the Contractor's, Engineer's and Owner's key staff members. Discuss aspects of stormwater management, e.g., drainage; dewatering; and erosion, sediment and pollution controls and monitoring.

3.02 GENERAL

A. Prevent any water discharge that creates or threatens to create a condition of nuisance as defined by the California Water Code Section 13050.

B. Prohibit any water discharge that degrades the quality of waters of the State of California and creates or threatens to create a condition of pollution or contamination as defined by the California Water Code Section 13050.

C. Prohibit discharge of waste and/or pollutant materials from entering surface waters or tributaries of surface waters.

D. Prohibit water discharge containing waste constituents in hazardous concentrations, as defined by the Title 22, Division 4.5, Article 11 California Code of Regulations.

E. Contain water that does not meet the requirements of the California Water Code or the California Code of Regulations within the canal until it meets such criteria or remove water from the Project Site and dispose of water according to all applicable laws and regulations.

3.03 STORMWATER MANAGEMENT

A. Dams, Ponds and Basins

1. Design, submit, install and remove any temporary check dams and temporary sediment control or storage ponds and basins.

2. The Contractor shall take complete responsibility of the design, construction, and maintenance of all temporary check dams.

B. Outlet Release Valves and Gates – Provide supervision, equipment and materials to operate and maintain any outlet release valves and gates. Liaison with the Owner on operation and maintenance techniques and peculiarities, and access and exact locations of the valves and gates. Take responsibility from the Owner on the status and operation of the outlet release valves and other discharge/spill facilities. In conjunction with Owner, Contractor will educate and train their personnel on the operation and maintenance of the valves and gates.

C. Goodwin Dam Gate Valves and Lock-Outs – Coordinate with the Owner and the Engineer to lock-out the South Main Canal headgates located at Goodwin Dam preventing irrigation water from entering the Canal. Place Contractor's lock(s) in conjunction with Owner's and Engineer's locks on the gate valves before performing any Work inside the Canal. Removal of the locks will be coordinated by the Owner after Substantial Completion when all the Work inside the canal is completed.

D. Other stormwater BMPs methods and means as per the SWPPP.

3.04 DRAINAGE, DEWATERING AND SEDIMENT/EROSION CONTROL

A. Perform dewatering in accordance with the Plan and Working Sketches "reviewed-and-accepted" by the Owner and Engineer. Keep the Engineer advised of any changes made to accommodate field conditions. On completion of the dewatering system installation, revise and resubmit Plan and Working Sketches as necessary to indicate the installed configuration(s).

B. Organize dewatering operations to lower the water levels in excavations as required for prosecution of the Work, and provide a stable, dry subgrade for the prosecution of construction operations.

C. Maintain water level at lower elevations, so that no danger to structures can occur because of buildup of excessive hydrostatic pressure and provide for maintaining the water level a minimum of two (2) feet below the subgrade, unless otherwise permitted by the Engineer.

D. Maintain groundwater level a minimum of five (5) feet below the prevailing level of backfill being placed.

E. Dispose of water in such a manner as to cause no injury or nuisance to general public or private property or be a menace to the public health or natural resources.

F. Design dewatering operations to maintain the excavated areas free from water during construction, while concrete is setting and achieves full strength, and until backfill has been placed to a sufficient height to anchor the work against possible flotation.

G. Prepare the Work for possible, unavoidable stormwater flows before, during and after major and minor storm events and plan the Work accordingly.

H. Divert or otherwise prevent surface water from entering excavated and concreted areas to the greatest extent practicable.

I. Control groundwater seepage into excavations from all water sources above the final subgrade level such that the seepage waters do not cause disturbance to subgrade soils and do not adversely affect construction of the Work as specified.

J. Install filtration materials and/or devices, i.e., to prevent fines/silts removal, ground loss, excavation piping where groundwater is exiting from the underground and/or surface excavation. Design/engineer and install filtration media properly according to manufacturer and industry standards.

3.05 EROSION, SEDIMENT AND POLLUTION CONTROL

A. Prevent sediments deposition from disturbed soils on adjacent land or into waterways by employing BMPs, including sediment settling/desilting basins, and erosion and sediment control devices as described in this Specification Section and Specification Section 02280 Erosion, Sediment and Pollution Control.

B. Prevent excavations from intercepting or obstructing the natural flow of a watercourse or drainage.

C. Provide filtration materials and devices to prevent fines/silts removal and losses, ground/sediment lost and soil piping where polluted water could exit from sediment control and desiltation basins.

D. Dispose of construction and polluted water on or off the Project Site according to applicable local, Stanislaus County, State of California, and federal laws and regulations.

3.06 CONCRETE AND SPOIL MANAGEMENT

A. Prevent water containing lime, mud, silt or other pollutants from concrete, shotcrete and grouting operations, aggregate washing or other construction activities from entering a watercourse or being placed in locations that may be subjected to being washed away.

B. Prohibit placing concrete, applying shotcrete or grouting during times of extreme stormwater events, such that the material constituents could possibly be washed downhill into watercourses or drainages.

C. Dispose of hardened concrete, shotcrete and grout waste off-site according as per Specification Section 02210 Site Preservation and Materials Disposal.

D. Dispose of residues, slurry and liquid wastes from concrete, shotcrete and grout operations off-site according to Specification Section 02210 Site Preservation and Materials Disposal.

E. Designate and sign locations for temporary concrete washout facilities. Inform concrete equipment and transit-mixer operators to utilize the temporary concrete washout facilities.

F. Construct temporary concrete wash-out facilities according to the diagrams shown in SWPPP BMPs.

G. Inspect routinely temporary concrete washout facilities for damage and maintenance, i.e., tears in polyethylene, missing sandbags, damaged straw bales, etc., maintain and repair facilities routinely and immediately.

3.07 FIELD QUALITY CONTROL

A. Inspect, and repair or replace stormwater BMPs, components and systems before, during and after each storm event or weekly, whichever is most frequent.

B. Provide water quality monitoring as required by the California Regional Water Quality Control Board review record requirement.

C. Submit data from observed water flows and water quality monitoring on a weekly basis to the Engineer for "review-and-acknowledgement."

3.08 FINAL STABILIZATION, TEMPORARY FACILITIES REMOVAL AND CLEAN-UP

A. Cover distributed areas not covered by pavement, aggregate base rock (gravel roadways) or permanent structural covering (e.g., shotcrete, concrete, asphalt, timber, etc.) with a uniform perennial vegetative cover.

B. Install riprap, gabions, geotextiles, etc. at the locations shown on the Contract Drawings and as needed to provide a sustainable, stabilized surface.

C. Remove and dispose of properly and legally all temporary structures and facilities, i.e., check dams and pumps and divergent piping stormwater flow measurement and water quality monitoring stations, concrete washout facilities, and other facilities.

D. Leave erosion and sediment control devices in place and repair or replace them as directed by the Engineer.

PART 4 - MEASUREMENT AND PAYMENT

4.01 METHOD OF MEASUREMENT

A. Stormwater Management (SWPPP, EPS, etc.) related items shall be measured as a percentage complete and accepted by the Engineer.

B. Design, construction, and maintenance of any temporary check dams and other stormwater management facilities, including but not limited to either check dams over or under four (4) feet high, shall not be measured.

C. Water Flow Measurement Stations – If required, the design, development, equipment procurement and maintenance, installation, measuring operations and station removal shall be considered incidental and shall not be measured.

D. Water Quality Monitoring Stations – If required, the design, development, equipment procurements, maintenance, monitoring (i.e., sampling, testing and analysis operations), and station removal shall be considered incidental and shall not be measured.

4.02 BASIS OF PAYMENT

A. Stormwater Management (SWPPP, EPS, etc.) related items and temporary stormwater facilities shall be paid as a percentage complete of the Contract lump sum (LS) price.

B. All other Work outlined in this Specification Section is considered incidental; therefore, not subject for payment, or is paid from under another Specification Section.

- END OF SECTION 02290 -

X:\Project\3000_prj\3818R OID Tunnel 8\Reports\Contract Docs_Specs\DIV 02\02290 Stormwater Management 20210721.docx

SECTION 02320

EARTHWORK

PART 1 – GENERAL

1.01 SCOPE

A. Work Specified – This Specification Section outlines and specifies the requirements for earthwork, including stripping (following Clearing and Grubbing as per Specification Section 02230), subgrade preparation for improvements and proposed fill (excavation, overexcavation, and subgrade compaction), fill placement and compaction, aggregate base placement and compaction, and related work necessary to complete the grading of the improved areas to conform with the lines, grades, and slopes as shown on the Contract Drawings.

B. Work Inclusions – The Work shall include all labor, materials, equipment, and incidentals to perform the Work outlined and/or specified in this Specification Section.

1.02 BACKGROUND AND SITE CONDITIONS

A. The Contractor should review site condition information before bidding.

B. Existing Utilities

1. Locate existing underground utilities before excavation.

2. If utilities will remain in-place, provide protection from damage during construction.

3. Should uncharted or incorrectly located utilities be encountered during excavation, consult Engineer immediately for direction prior to proceeding with additional Work near the utilities. Cooperate with Owner and utility companies to keep services and facilities operating. Repair damaged utilities to satisfaction of utility owner.

1.03 DEFINITIONS

A. Backfill – Engineered fill placed and compacted in an excavation.

B. Clearing – Clearing of grass, brush, trees, stumps, tree roots, debris and otherwise unsuitable material from the ground surface at areas to receive excavation, fill, or improvements.

C. Engineered Fill – Fill that is placed and compacted according to the requirements in this specification, and under the observation and testing of Engineer's Materials Testing Laboratory.

D. Grubbing – Removal of vegetative material greater than one (1) inch in diameter to a depth of twelve (12) inches below the existing ground surface.

E. Moisture Content - The weight of moisture in fill as a percentage of the dry weight of solids of the same unit volume of fill.

F. Natural soil – Soil that is not fill and that has not been disturbed by previous grading.

G. Optimum Moisture Content – The moisture content of fill that corresponds to the maximum dry unit weight of the same fill material as determined by ASTM D1557.

H. Organic Material – Soil or other material with more than two percent (2%) by dry weight of organics and deleterious material.

I. Percent Compaction – The dry density of fill in-place expressed as a percentage of the maximum dry density of the same fill material determined by ASTM D1557.

J. Stripping – Removal of topsoil, vegetation, roots and organic material from areas to receive excavations, fill, or improvements.

K. Subgrade – Top of fill beneath slabs-on-grade, pavement, and aggregate layers beneath pavement, or the excavated ground surface beneath engineered fill and such improvements.

L. Suitable Material – Subgrade material and fill that meets the product requirements for Engineered Fill in this Specification Section.

M. Topsoil – Organic material near the existing ground surface.

N. Unsuitable material – Subgrade material and fill that does not meet the product requirements for Engineered Fill in this Specification Section.

O. Uncompacted fill – Fill that has not been compacted to the minimum specified percent compaction.

1.04 SPECIFICATIONS, CODES, STANDARDS AND REPORTS

A. General – Unless otherwise revised, altered, modified and/or stated differently in this Specification Section or Related Work Specification Sections, the Contractor

shall comply to the following Specifications, Codes, Standards and Reports (latest published editions):

1. California Code Regulations, Title 8, Chapter 4 – Division of Industrial Safety Orders (Cal-OSHA), Subchapter 4 – Construction Safety Orders

2. American Association of State Highway and Transportation Officials (AASHTO)

3. California Building Code (CBC), California Code of Regulations, Title 24, Part 2, Volumes 1 and 2, latest edition

4. State of California, Department of Transportation (Caltrans), Standard Specifications, latest edition

5. American Society for Materials and Testing (ASTM) D1557 Standard Test Methods for Laboratory Compaction Characteristics of Soil Using Modified Effort (Modified Proctor)

6. OID Standard Specifications and Drawings

1.05 RELATED WORK SPECIFICATION SECTIONS

01200	Project Management, Administration and Facilities Operation
01250	Quality Control and Assurance
01320	Progress and Schedules
01330	Submittals
02210	Site Preservation and Materials Disposal
02230	Clearing and Grubbing
02280	Erosion, Sediment and Pollution Control
02290	Stormwater Management
02415	Tunnel Repair Using Mobile Equipment

1.06 DESIGN PARAMETERS – (NOT USED)

1.07 QUALITY CONTROL AND ASSURANCE REQUIREMENTS

A. General – Refer to General Requirements Specification Section 01250 Quality Control and Assurance.

B. Operator Qualifications – Engaged experienced personnel who have completed earthwork similar to that required for this Project.

C. The Engineer and Engineer's Materials Testing Laboratory shall provide oversight, observation, and testing for all earthworks.

1.08 SAFETY AND SECURITY REQUIREMENTS

A. Work Compliance – All Work shall be done in compliance with all applicable federal and state safety and health regulations (Fed-OSHA and Cal-OSHA)

B. Applicable Regulations – California Code Regulations, Title 8, Chapter 4 – Division of Industrial Safety Orders (Cal OSHA), Subchapter 4 – Construction Safety Orders (Sections 1500 – 1938), and Subchapter 7 – General Industry Safety Orders (Sections 3200 – 6184) are the most applicable regulations for this Section.

C. Engineer and Owner Safety Responsibilities – Both the Engineer and the Owner will perform their Work (e.g., observations, inspections, quality assurance testing, etc.) under the Contractor's Safety and Health Policies and Injury and Illness Prevention Program.

1.09 ENVIRONMENTAL REQUIREMENTS AND PERMITS

A. Refer to Specification Sections 02280 Erosion, Sediment and Pollution Control and Section 02290 Stormwater Management.

1.10 CONTRACTOR SUBMITTALS

A. Pre-Construction Phase – The Contractor shall submit to the Engineer for "review-and-acceptance" the following before the Work outlined in this Specification Section can begin:

1. Product Data: For each type of product or material specified or used. Include filter fabric and imported fill material.

2. For firms and persons specified in Specification Section 01250 Quality Control and Assurance to demonstrate their capabilities and experience. Include lists of completed projects with project names and addresses, names and addresses of engineers and owners, and other information specified.

3. Grading Permit, if required, shall be submitted to the Engineer for "review-and-information."

B. Closeout Phase – Submit the following to the Engineer for "review-and-information."

1. Grading permit sign-off by counties, if required.

1.11 SPECIAL CONDITIONS AND REQUIREMENTS

A. The Contractor is responsible for conclusions Contractor may draw from the available subsurface information; should Contractor prefer not to assume such risk,

Contractor should employ their own experts to analyze available information and/or to make additional test pits or other explorations upon which to base their conclusions, at no cost to the Owner.

B. The Engineer is not responsible for determining line and grade, elevations or slope gradients during earthwork operations.

PART 2 – PRODUCTS

2.01 ENGINEERED FILL

A. Fill shall be material from on-site excavation or imported material that contains no organic material or debris, has a maximum particle size of four (4) inches, has at least seventy percent (70%) passing the ¾-inch-square sieve by dry weight, at least sixty percent (60%) passing the U.S. No. 4 sieve by dry weight, has a plasticity index of 15 or less, and has a liquid limit of 40 or less. Material may be processed by crushing and/or screening to meet the maximum particle size requirement. Material to be used as engineered fill must be sampled and tested by the Engineer's Materials Testing Laboratory. The Contractor shall furnish a sample of proposed import material(s) at least ten (10) working days prior to using the imported material to enable the Engineer's Materials Testing Laboratory to test and the Engineer to evaluate the material.

PART 3 – EXECUTION

3.01 SITE PREPARATION, SUBGRADE PREPARATION, AND ENGINEERED FILL

A. The Contractor shall notify the Engineer and Engineer's Materials Testing Laboratory at least two (2) workdays before earthwork begins to schedule and coordinate observation and testing with the Contractor.

B. The Engineer shall provide oversight of earthwork, and observation and testing by the Engineer's Materials Testing Laboratory shall be performed. Earthwork performed without Engineering oversight, observation, and testing will not comply with the Specifications.

C. Grading and site work shall be performed in accordance with Contract Drawings, the latest edition California Building Code (CBC), Appendix Chapter J (Grading) and Chapter 18 (Soils and Foundations), and directions from the Engineer during construction. Where these requirements conflict, the Engineer shall provide clarification. The requirements shown on the Contract Drawings and in the Specifications shall not be waived without written "review-and-acceptance" by the Engineer.

D. Excavation shall be carried to lines, grades, and dimensions shown on the Contract Drawings or established by the Engineer. During progress of the Work, the Contractor may choose to vary the slopes and dimensions of excavations required in the Contract Documents. The Contractor does so at its own risk. Final slopes and dimensions shall not be varied without written consent from the Engineer.

E. Permanent, unsupported cutslopes shall be no steeper than shown on the Drawings.

F. The existing ground surface shall be prepared in all areas to receive excavations, fill, or improvements. Site preparation, following clearing and grubbing (as per Specification Section 02230), includes demolition/removal of existing surface and subsurface improvements, removal of any debris or unsuitable material, and stripping. Site preparation shall extend at least three (3) feet beyond limits of excavation, fill, and new improvements. The Engineer shall observe and approve prepared surfaces prior to excavation, subgrade preparation, and covering with fill or improvements.

G. At the direction of the Engineer, any unsuitable material exposed after stripping should be removed and wasted. Any soft, loose, or yielding material should be removed and replaced with compacted engineered fill.

H. Subgrade preparation shall be performed prior to covering exposed ground with fill or improvements. Subgrade preparation shall extend at least three (3) feet beyond the limits of excavation, fill, and new improvements. Subgrades consisting of soil (as opposed to hard rock) shall be scarified, moisture conditioned to near the optimum moisture content, as required to facilitate compaction, and compacted to at least 90 percent compaction. The Engineer shall check and approve subgrades prior to covering them. Subgrades that become disturbed, as indicated by the Engineer, shall be prepared again according to the requirements of this Article before they are covered.

I. Fill and backfill meeting the property specifications shall be placed over surfaces prepared in accordance with the previous Article. Fill shall be placed in lifts up to eight (8) inches in loose thickness. Each lift shall be compacted to 90 percent compaction and tested by the Engineer's Materials Testing Laboratory prior to placing subsequent lifts.

3.02 PROTECTION

A. In accordance with generally accepted construction practices, the Contractor shall be solely and completely responsible for working conditions at the Project Site, including safety of persons and protection of property during performance of the Work. This requirement shall apply continuously and shall not be limited to working hours.

B. Adequate protection measures shall be provided to protect workers and passers-by. Roadways and adjacent property shall be fully protected throughout the operations.

C. Precautions shall be taken during earthwork and site grading to protect the work area from flooding or ponding resulting from improper surface drainage, and temporary provisions should be made during the rainy season to direct surface drainage away from the work area. Rain-related damage may include, but is not limited to, erosion, silting, saturation, swelling, slope instability and other adverse conditions. Adversely affected soils classified as unsuitable are subject to overexcavation and replacement with compacted fill or other remedial grading as directed by the Engineer.

3.03 SPILLAGE, DUST AND EROSION CONTROL

A. Spillage – The Contractor shall prevent spillage when hauling on or adjacent to private roadways that are not a part of this Project, or any public street or highway. In the event that such occurs, the Contractor shall remove spillage and sweep, wash or otherwise clean such roadways, streets or highways as required by local city and county authorities, the State of California and/or the Engineer.

B. Fugitive Dust and Erosion Control – The Contractor shall take precautions as needed to prevent a dust nuisance to adjacent public or private properties and to prevent erosion and transportation of soil to downstream or adjacent properties due to Contractor's Work on this Project. Any damage so caused shall be corrected or repaired by the Contractor, Subcontractor or Supplier at no additional cost to the Owner. Related provisions of Specification Sections 02210 Site Preservation and Materials Disposal, 02280 Erosion, Sediment and Pollution Control and 02290 Stormwater Management shall also be referenced for additional requirements related to erosion control, fugitive dust, and environmental compliance.

C. Engineer/Owner's Prerogative – In the event the Contractor fails to take such precautions or make such corrections or repairs promptly, the Engineer, as the Owner's representative, may take such steps as Engineer may deem necessary and deduct the cost of the same from the monies due to the Contractor. Such action or lack of action on the part of the Engineer in no way alters or relieves the Contractor for the proper protection of the Work.

3.04 SEASONAL LIMITS

A. Fill material shall not be placed, spread or rolled during unfavorable weather conditions. When heavy rains interrupt the Work, fill operations shall not be resumed until field tests indicate that the moisture contents of the subgrade and fill materials are satisfactory.

3.05 FIELD QUALITY CONTROL

A. The Work covered by this Specifications Section shall be performed under the observation of the Engineer.

B. The Engineer and the Engineer's Materials Testing Laboratory will be present at the Site intermittently to observe the Work and to perform field and laboratory tests to evaluate material quality and compaction. The Contractor shall cooperate with the Engineer and the Engineer's Materials Testing Laboratory in performing the observations and tests. At the completion of their work, the Engineer and Engineer's Materials Testing Laboratory shall submit reports, including a tabulation of items observed and tests performed. The Engineer's and the Engineer's Materials Testing Laboratory's costs for observing and testing the repair of unsatisfactory Work performed shall be back-charged to the Contractor.

C. If the Contractor should fail to meet the technical or design requirements embodied these Specifications and the applicable Contract Drawings, Contractor shall make the necessary readjustments until Work is deemed satisfactory, as determined by the Engineer. No deviation from the Specifications shall be made except by "review-and-written acceptance" from the Engineer.

3.06 DISPOSAL OF SPOIL

A. Refer to Specification Section 02210 Site Preservation and Materials Disposal.

PART 4 – MEASUREMENT AND PAYMENT

4.01 METHOD OF MEASUREMENT

A. Refer to Specification Section 02210 Site Preservation and Materials Disposal and 02415 Tunnel Repair Using Mobile Equipment.

4.02 BASIS OF PAYMENT

A. Refer to Specification Section 02210 Site Preservation and Materials Disposal and 02415 Tunnel Repair Using Mobile Equipment.

B. All other Work outlined in this Specification Section is considered incidental, therefore, not subject for payment, or is paid for under another Specification Section.

- END OF SECTION 02320 –

SECTION 02370

SURFACE PREPARATION FOR CONCRETE AND SHOTCRETE

PART 1 - GENERAL

1.01 SCOPE

A. Work Specified – This Technical Specification Section outlines and specifies the Work required to prepare ground surfaces for concrete and shotcrete placement.

1. Inside tunnel after back and rib scaling, for invert cast-in-place concrete and arch shotcrete, and

2. Outside portal head and sidewalls, after clearing and grubbing, for invert cast-in-place concrete and slopes shotcrete.

B. Work Inclusions – The Work shall include all labor, materials, equipment and incidentals to perform the Work outlined and/or specified in this Technical Specification Section.

1.02 BACKGROUND AND EXISTING CONDITIONS

A. The surface conditions of Tunnel 8 and the upstream and downstream portal areas were observed by the engineer during "Dry-Canal" period. Because much of the canal and tunnel surfaces will be underwater, the bidding contractors will only be able to see these surfaces via drone video during the pre-bid period. The Contractor should bid this aspect of the Work based on the descriptions and the available photographs and video.

B. The canal walls upstream and headwall of the upstream portal have a shotcrete liner approximately four (4) inches thick. All loose and/or debonded areas, vegetation and soil should be removed. The remaining shotcrete and invert should be pressure washed.

C. The sidewalls and headwall of the downstream portal area have a shotcrete liner that is approximately four (4) inches thick. All loose and/or debonded areas, vegetation and soil should be removed. The remaining shotcrete and invert should be pressure washed.

D. The tunnel interior is typically unlined and will require blow pipe cleaning.

1.03 DEFINITIONS

A. "Dry-Canal" Period – Time period between mid- to late October and early March when the North Main Canal is empty of flowing irrigation water. At the Goodwin Dam, the canal irrigation water is valved off from entering the canal and diverted into the Stanislaus River.

B. "Surface Preparation" does not include earthwork.

C. Pressure Washer – Cleaning device capable of spraying water and additives at 5,000 psi using a spray wand.

D. Blow-Pipe or Air/Water Jet – Compressed air, with a valve to add water when needed, forced though a pipe, used for cleaning.

E. Tights – Unexcavated materials, initial support elements, or ancillary ground support elements which, except as otherwise allowed, encroach within the design line.

F. Design or "A" Line – A line defining the theoretical minimum size of the underground excavation within which no rock, soil or initial support is allowed to encroach, except where otherwise indicated, and which provides the required clearance between the initial support and the finished surface of the final lining.

G. Overbreak or "B" Line – The opening is in excess of what is necessary to install support elements outside the design "A" line or an acceptable distance within the design line. Overbreak may or may not be caused by overexcavation.

H. Canal Water Line – High water line at maximum canal flow, typically visible in the canals and tunnel due to discolorations.

I. Concrete Mud Mat – Temporary lean concrete placed along the invert, usually for access purposes.

J. Tunnel Arch – The curved section of the tunnel above springline.

K. Tunnel Back – The roof, crown or ceiling of a tunnel.

L. Tunnel Ribs – The tunnel walls.

M. Invert – Lowest point in the tunnel were water flows. In a circular tunnel, the invert is approximately the bottom ninety degrees (90˚) of the arc of the tunnel; in a square bottom tunnel it is the bottom of the tunnel.

1.04 SPECIFICATIONS, CODES, STANDARDS AND REPORTS

A. General: Unless otherwise revised, altered, modified and/or differently stated in this Specification Section or in Related Work Specification Sections, the Contractor shall comply with the following Specifications, Codes, Standards and Reports, and their latest editions.

1. American Concrete Institute (ACI)
   301 Specification for Structural Concrete
   506.2 Specification for Shotcrete

1.05 RELATED WORK SPECIFICATION SECTIONS

01200	Project Management, Administration and Facilities Operation
01250	Quality Control and Assurance
01320	Progress and Schedules
01330	Submittals
02210	Site Preservation and Materials Disposal
02230	Clearing and Grubbing
02280	Erosion, Sediment and Pollution Control
02290	Storm Water Management
02415	Tunnel Repair Using Mobile Equipment
03300	Concrete Cast-in-Place
03470	Shotcrete

1.06 DESIGN PARAMETERS – (NOT USED)

1.07 QUALITY CONTROL AND ASSURANCE REQUIREMENTS

A. General – Refer to Technical Specification Section 01250 “Quality Control and Assurance.”

1.08 SAFETY AND SECURITY REQUIREMENTS

A. Work Compliance – All Work shall be done in compliance with all applicable Federal and State safety and health regulations (Fed-OSHA and Cal-OSHA).

B. Applicable Regulations – California Code Regulations, Title 8, Chapter 4 – Division of Industrial Safety Orders (Cal-OSHA), Subchapter 4 – Construction Safety Orders (Sections 1500 – 1938), Subchapter 7 – General Industry Safety Orders (Sections 3200 – 6184), and Subchapter 20 – Tunnel Safety Orders (Sections 8400 – 8568) are the most applicable regulations for this Technical Specification Section.

C. Engineer and Owner Safety Responsibilities – Both the Engineer and the Owner will perform their Work, e.g., observations, inspections, quality assurance testing,

etc., under the Contractor's Safety and Health Policies and Injury and Illness Prevention Program.

1.09 ENVIRONMENTAL REQUIREMENTS AND PERMITS

A. No special environmental permits are required for the Work in this Technical Specification Section.

B. Refer to Technical Specification Section 02280 Erosion, Sediment and Pollution Control and Section 02290 Stormwater Management.

1.10 CONTRACTOR SUBMITTALS

A. Pre-Construction Phase – The Contractor shall submit to the Engineer for "review-and-acceptance" the following before the Work outlined in this Technical Specification Section can begin:

1. Work Plan with Working Sketches – Provide a narrative and sketches describing the methods and means, procedures, sequences and equipment specification to prepare the various surfaces for concrete and shotcrete.

B. Construction Phase – No special submittals required.

C. Close-Out Phase – No special submittals required.

1.11 SPECIAL CONDITIONS AND REQUIREMENTS – (NOT USED)

PART 2 - PRODUCTS

2.01 CONSTRUCTION EQUIPMENT

A. The contractor is to furnish the following equipment with the specified capacities and attachments:

1. Pressure Washer – Units shall be capable of spraying water and additives at 5,000 psi using a spray wand. The units may be gasoline powered for Work on the surface outside the tunnel, but shall be diesel, electric or compressed air powered for Work underground and, or inside the tunnel.

2. Compressed Air/Water Sprayer (Blow Pipe) – Units shall combine compressed air and water from a compressed air line and a water line inside and outside the tunnel.

PART 3 - EXECUTION

3.01 PRELIMINARY PREPARATIONS

A. The contractor shall execute the following:

1. Portal Walls – Inspect the portal walls for possible shotcrete defects or deterioration, or unstable ground. Bar down or rock dowel with temporary devices ground that has the potential of falling or sliding. Clear and grub surfaces to be shotcreted above the canal water line.

2. Tunnel – Inspect the tunnel for possible rock falls. Remove unstable ground by excavation to the "B" line; install temporary ground support if needed beyond the "B" line.

3.02 DETAILED SURFACE PREPARATIONS

A. Portal Walls Above Water Line – Remove loose, friable ground above the canal's water line to the satisfaction of the Engineer. Pressure wash or blow pipe the surface to be shotcreted. Maintain the surface damp for shotcrete application.

B. Portal Walls Below Water Line – Pressure wash walls or blow pipe below the canal's water line to the satisfaction of the Engineer to remove algae and encrustations. Maintain the surface damp for shotcrete application.

C. Portal and Tunnel Invert – Blow pipe and remove loose mud, silt, sand, gravel and cobbles. If needed, remove boulders by hand or using appropriate equipment. If needed, with "review-and-acceptance" of the Engineer, place a concrete mudmat using Class F 1,500 psi lean concrete mix. Remove standing water and maintain the surface damp for mudmat concrete and for structural concrete placements.

D. Tunnel Ribs and Arch Above and Below Water Line – Refer to Technical Specification Section 02415 Tunnel Repair Using Mobile Equipment. If tunnel back or ribs require detail surface preparation, treat as: Article 3.02.B Portal Walls Below Water Line of this Technical Specification Section. Prepare surfaces in detail, and "reviewed-and-accepted" by the Engineer.

3.03 FIELD QUALITY CONTROL

A. Refer to Technical Specification Section 02320 Earthwork.

B. The Engineer shall check the adequacy of in-place materials and the need for overexcavation. The Contractor shall inform the Engineer of his intent to place concrete or shotcrete and shall receive the Engineer's "acceptance" to commence before such operations start.

C. The Engineer or qualified representative shall inspect excavations immediately prior to placement of concrete or shotcrete to check that they are free of loose soils, water, debris and other unsuitable materials.

3.04 DISPOSAL OF SPOIL

A. Refer to Technical Specification Section 02210 Site Preservation and Materials Disposal.

PART 4 - MEASUREMENT AND PAYMENT

4.01 METHOD OF MEASUREMENT

A. The detail surface preparation for shotcrete application of the Portal Walls, Portal Invert, Tunnel Ribs, Arch, and Invert shall be included as incidental costs for the shotcrete and concrete work.

B. Tunnel Ribs, Arch and Invert – Refer to Technical Specification Section 02415 Tunnel Repair Using Mobile Equipment, Article 4.01.A.

4.02 BASIS OF PAYMENT

A. Detailed surface preparation for shotcrete application and concrete placement of the portal walls, portal invert, tunnel ribs, arch, and invert outlined in this Technical Specification Section is considered incidental; therefore, not subject for payment, or is paid for under another Technical Specification Section.

B. Soil and rock spoil removed from tunnel and canal – Refer to Technical Specification Section 02210 Site Preservation and Materials Disposal, Article 4.02.A.

C. All other Work outlined in this Technical Specification Section is considered incidental; therefore, not subject for payment, or is paid for under another Technical Specification Section.

- END OF SECTION 02370 -

X:\Project\3000_prj\3818R OID Tunnel 8\Reports\Contract Docs_Specs\DIV 02\02370 Surface Prep Concrete Shotcrete 20210721.docx

SECTION 02415

TUNNEL REPAIR USING MOBILE EQUIPMENT

PART 1 - GENERAL

1.01 SCOPE

A. Work Specified – Repair/rehabilitation work in a man-entry tunnel using mobile equipment shall include, but is not limited to, the following: tunnel excavation/re-shaping, tights removal, invert loose muck removal, tunnel back scaling, and handling and disposal of all materials encountered or wasted. Also included in this Section are ventilation, communications, utilities, and lighting, and all other work necessary to complete the Work in accordance with the Contract Specifications and Contract Drawings.

B. Work Inclusions – The Work shall include all labor, materials, equipment, and incidentals to perform the Work outlined and specified in this Technical Specification Section.

1.02 BACKGROUND AND JOB CONDITIONS

A. Tunnel 8, which is 610 feet long, was excavated as part of the South Main Canal System. The tunnel's configuration is a rough horseshoe shape with a crown height of approximately 10 feet and a flat invert width of approximately 11 feet. The height and width of the tunnel may locally increase where erosion or ground falls have occurred.

B. Other than for a short distance inside the tunnel from each portal, the tunnel has not been inspected or measured, owing to potential safety concerns.

C. Tunnel 8 has been classified by Cal-OSHA as Non Gassy with Special Conditions. The classification certificate is attached following Section 02415.

1.03 DEFINITIONS

A. Refer to Technical Specification Section 2370 Surface Preparation for Concrete and Shotcrete

B. Mobile Equipment – For this section, rubber-tired or crawler-track, diesel equipment that meets 30CFR Part 32 (Formerly Schedule 24) for a non-gassy rating or 30CFR Part 36 (formerly 31) for a gassy rating by MSHA, and that is operated by a person in an underground opening.

C. Bulkhead – A tight partition, brattice, or stopping in a tunnel, raise or shaft.

D. Certified Person – A person certified by Cal-OSHA to act as the Underground Safety Representative and Gas Tester.

E. Competent Person – One who is capable of identifying existing and predictable hazards in the surroundings or working conditions which are unsanitary, hazardous, or dangerous to employees, and who has authorization to take prompt correctible measures to eliminate them.

F. Crown Bars – Timber or steel beams that extend ahead of the mobile equipment and the last set of timber or rib steel supports for temporary tunnel support and protection of workers near the face.

G. Cut and Cover – A work method which places a temporary roof over open excavation while doing further excavation or other work beneath the cover.

H. Face-Underground – That part of any adit, tunnel, or raise where excavating is progressing, or was last done.

I. Fan-Auxiliary – A fan used to provide ventilation or circulate air to areas off the main fresh air course.

J. Fan-Booster – A fan installed in the ventilation system to increase the ventilation flow rates of the system.

K. Fan-Main – A fan or system of fans that are located at the surface which controls the primary ventilation of a tunnel or underground chamber.

L. Ground Support – Wood, steel, concrete, shotcrete, rock bolts, or other materials used for bracing or supporting the ground.

M. Jumbo – A mobile platform or series of platforms, usually on wheels, to provide work areas for employees and the machines, tools, or materials being used.

N. Laser – Light amplification by stimulated emission of radiation and is used as a coherent beam of light for alignment.

O. Lower Explosive Limit (LEL) – Lowest concentration of flammable gas in an atmosphere where ignition could occur.

P. Mechanical Tunneling Equipment – Equipment such as mechanical excavators, tunnel boring machines, shields, roadheaders, and raise boring machines.

Q. Muck – Excavated rock, earth or other materials.

R. Permissible – A machine, material, apparatus, or device which has been investigated, tested, and approved by the Mine Safety and Health administration, and is maintained in accordance with the requirements of the approving agency.

S. Qualified Person, Attendant or Operator – A person designated by the employer, who by reasons of their training and experience has demonstrated their ability to safely perform their duties and, where required, is properly licensed and/or certificated in accordance with Federal, State or local laws and regulations.

T. Return Air – The portion of the ventilation system between the point where fresh air is introduced into the underground environment and its point of release into the outside atmosphere.

U. Scrubber – An exhaust purifying device used on internal combustion engines to reduce discharge of harmful exhaust gases.

V. Spoil – Same as Muck.

W. Tunnel – An underground passageway, 30 inches in diameter or greater, excavated by employees working below the earth's surface, that provides a subterranean route along which employees, equipment or substances can move; other than passageways excavated by mine or quarry operators in connection with such operations. Tunnels include adits, shafts, raises, underground chambers and premises appurtenant thereto.

X. Two-Block – A condition in hoisting where the load, or termination assembly is hoisted to the point of making contact with an obstruction normally present in the hoisting system. Generally, a condition resulting from the load or termination assembly being hoisted under power into a head frame assembly or crane boom-tip.

Y. Temporary Ground Support or Lining – Ground support installed normally near the point of excavation and soon after excavation for the purpose of stabilizing the opening temporarily in order for underground workers to perform safely.

Z. Tunnel Classification – An underground classification given by the State of California, Department of Industrial Relations, Division of Occupational Safety and Health, Mining and Tunneling Unit, Cal-OSHA.

AA. Permanent Ground Support or Lining – The final lining or ground support which protects the facility and the Owner's staff and/or the general public from the ground caving, rock falls, etc.

BB. A Line – The line in a cross section view(s) that has no rock, steel, or other material, except for shotcrete, gunite, and/or concrete material and their reinforcement, protruding inside this line.

CC. B Line – The line in section view(s) that has overbreak, holes, cavities, voids, open fissures, abrupt ground and/or lining changes, and open space beyond this line. The open space outside this line is filled with permanent lining material, i.e., concrete or shotcrete, and/or void fill grout.

DD. Excavation Line – After final excavation this line marks the difference between ground support (shotcrete, concrete, steel and wood lining) and the ground (rock and/or soil).

EE. Finish Line – The surface of the permanent or final lining.

FF. Tunnel Configuration – The shape of the underground final lining, i.e., circular, horseshoe, inverted U, basket handle, square, rectangular, box, and timber set shape.

GG. Tunnel Center Line – The vertical line between opposing, but identical tunnel shape halves.

HH. Tunnel Spring Line – The point where the curved portion of the roof meets the top of the wall. In a circular tunnel, the spring lines are at opposite ends of the horizontal centerline. In a horseshoe tunnel, it is the point where the two radius curves come together.

II. Invert – Lowest point in the tunnel where water flows. In a circular tunnel, the invert is approximately the bottom 90º of the arc of the tunnel; in a flat or curved bottom tunnel it is the bottom between the flat or curve section ends.

JJ. Ribs – Tunnel sidewalls.

1.04 SPECIFICATIONS, CODES, STANDARDS AND REPORTS

A. General: Unless otherwise stated altered, modified or revised in this Specification Section or in Related Work Section Specifications, the Contractor shall comply with the following specifications, codes, standards and reports, and their latest editions:

1. California Building Code (CBC), current edition, California Code of Regulations, Title 24, Part 2, Volumes 1 and 2.

2. Standard Specifications for Public Works Construction (Greenbook), current edition.

1.05 RELATED WORK SPECIFICATION SECTIONS

01200 Project Management, Administration and Facilities Operation
01250 Quality Control and Assurance
01320 Progress and Schedules

01330	Submittals
02210	Site Preservation and Materials Disposal
02290	Storm Water Management
02320	Earthwork
02490	Tunnel Ground Reinforcement
03300	Concrete Cast-in-Place
03470	Shotcrete

1.06 DESIGN PARAMETERS – (NOT USED)

1.07 QUALITY CONTROL AND ASSURANCE REQUIREMENTS

A. Contractor's or Subcontractor's Company Qualifications – All tunnel repair/ rehabilitation operations shall be performed by a qualified and California licensed Contractor or Subcontractor with at least five (5) years and two thousand (2,000) linear feet experience of tunnel or underground mine excavation and/or support using mobile diesel equipment specified for use for this Project.

B. Quality Control Supervision

1. The Contractor's Project Manager and Contractor's/Subcontractor's Superintendent (the two most senior supervisors on the Project full time) must each have at least five (5) years of underground construction experience, and two (2) years within the last five (5) years.

2. These two supervisors shall act as the quality control supervisors for the Project.

C. Personnel Qualifications – Only qualified personnel shall perform the tunnel repair/ rehabilitation work. The Project Manager and/or Superintendent shall be a competent person and shall have completed at least two underground construction projects using the specific mobile equipment. The Underground Safety Representative and Gas Tester(s) shall be experienced in tunnel construction and shall be certified by Cal-OSHA, Mining and Tunneling Group.

D. Engineer's Presence – All tunnel excavation and ground support shall be performed in the presence of the Engineer, unless the Engineer has granted prior review-and-acceptance in writing to perform such work in his absence.

E. Other Quality Control and Assurance Requirements – Refer to Technical Specification 01250 Quality Control and Assurance.

1.08 SAFETY AND SECURITY REQUIREMENTS

A. Work Compliance – All Work shall be done in compliance with all applicable federal and state safety and health regulations (Fed-OSHA and Cal-OSHA)

B. Applicable Regulations

1. California Code Regulations, Title 8, Chapter 4 Division of Industrial Safety Orders (Cal-OSHA), Subchapter 4 Construction Safety Orders (Sections 1500 – 1938), Subchapter 7 General Industry Safety Orders (Sections 3200 – 6184), and Subchapter 20 Tunnel Safety Orders (Sections 8400 – 8568) are the most applicable regulations for this Section.

2. Cal-OSHA vs. Fed-OSHA Regulations – The Contractor shall comply with all applicable provisions of the Tunnel Safety Orders by Cal-OSHA and 29 CFR Part 1926, Subpart S, Underground Construction by Fed-OSHA. In the event of conflict, comply with the strictest or most restrictive applicable requirements.

C. Engineer and Owner Safety Responsibilities – Both the Engineer and the Owner shall perform their work (i.e., observations, inspections, quality assurance testing, etc.) under the Contractors Safety and Health Policies and Injury and Illness Prevention Program.

D. Underground Safety Representative – The Contractor or his Subcontractor shall have on site, full time a Certified Safety Representative (CSR). This person

1. Shall be certified as such by Cal-OSHA, Mining and Tunneling Group.

2. Shall have at least ten (10) years of underground construction experience, with three (3) years within the last five (5) years.

3. May be the Project Manager or Superintendent or a subordinate to the Project Manager or Superintendent.

4. May have other collateral duties on site, e.g., purchasing, equipment maintenance and repair, surveying, quality control, supervision, etc.

5. Shall be on site at least fifty percent (50%) percent of the time while work is being performed. If not on site, the person shall be nearby the Project site during working hours within ninety (90) minutes travel time, if summoned by the Cal-OSHA, the Contractor, Engineer, or Owner.

E. Gas Tester – Personnel responsible for monitoring the underground atmosphere shall be certified by Cal-OSHA, Mining and Tunneling Group as Gas Testers. The Underground Safety Representative may perform Gas Tester duties, if certified by Cal-OSHA to do so. The Project Manager's or Superintendent's subordinates may be used as Gas Testers. There shall be at least one (1) Certified Gas Tester on each shift while work is being performed in the tunnel, or as required to comply with Cal-OSHA Tunnel Safety Orders.

F. Tunnel Rescue Team – The Contractor shall be responsible for having a tunnel rescue team available nearby and adequately trained.

G. Visitors Underground – The Contractor shall be responsible in granting permission, training of underground procedures, and guiding visitors in and out of the tunnel. Visitors shall not enter the tunnel unaccompanied. All employees and visitors of the Engineer and the Owner will gain permission from the Contractor prior to entering the tunnel.

H. Tunnel Security – The Contractor shall be responsible for securing the tunnel when left unattended. The Contractor shall keep the general public out of the tunnel.

1.09 ENVIRONMENTAL REQUIREMENTS

A. Refer to Technical Specification Section 02280 Erosion, Sediment and Pollution Control and 02290 Storm Water Management.

1.10 CONTRACTOR SUBMITTALS

A. Pre-Construction Phase – The Contractor shall submit to the Engineer for review-and-acceptance the following:

1. Organization

   a. An Organization chart showing the flow of responsibility to include all Subcontractors and major suppliers, showing the proposed names of the Project Manager, General and/or Tunnel Superintendents, Project and/or Field Engineers, Underground Safety Representative, Gas Testers, Shift Walkers, Superintendents, and/or Foremen Tunnel mobile Equipment Operators, Master Mechanic and/or Electrician, Tunnel Rescue Team members and Subcontractor, Supervisors and major suppliers and engineers.

   b. Name table listing of the above personnel with their last and first name, title, organization affiliation, office phone and fax, cell phone number, emergency (home) phone number and email address.

2. Qualifications – Résumés with photocopy documentation as supporting evidence of the qualifications and certifications of the contractor's Project Manager, Superintendents, Tunnel Mobile Equipment Operators, the Underground Safety Representative, Gas testers, Project Surveyors, Project/ Field Engineers and other supervising personnel.

3. Project Brief – Work Plan with Working Sketches describing and illustrating the design, layout, and operation of each system component including: excavation methods, mucking spoil removal system, guidance

and controls, personnel access, ventilation, lighting and utilities, and ground support erection scheme. Address each portal entry for the tunnel. (The project brief should be approximately 1,000 words with three (3) to five (5) sketches.)

B. Construction Phase – The Contractor shall submit to the Engineer for review-and-acceptance the following:

1. Tunnel Work Plan – A detailed description of the tunneling mobile equipment and procedures to be employed; manufacturer's literature describing, in detail, the mobile equipment to be used; methods and means for maintaining ground stability in the tunnel; maximum size and shape of rock that can be excavated and removed by the proposed mobile equipment; supporting documentation, which includes narratives, calculations, and Working Sketches, showing details of the proposed methods and procedures for the following: tight removal in the tunnels, invert cleaning, hauling and disposal of tunnel muck, ventilation and illumination design and installation, ground support procedures, residual, storm, ground and construction water control, drainage and pumping, non-work hours, tunnel security and emergency call-outs.

2. Drainage and Dewatering Work Plan – A detailed description of the system, components, equipment, materials and procedures of the drainage and dewatering work plan; supporting documentation, which includes narratives, calculations, graphs, tables and Working Sketches; (This plan may be incorporated into the submittal requirements of Technical Specification Section 02290 Storm Water Management, Article 1.10 Contractor Submittals.)

3. Equipment and Procedures Work Plans – Narratives, calculations, graphs, tables, permits, agreements, and Working Sketches for:

   a. Spoil Stockpile, Transport and Disposal: Details on the muck transport procedures. Include the equipment used to excavate, transport, stockpile, haul and remove spoils from the tunnel and from the site. Also include permits and hold-harmless agreements. (This Plan may be incorporated into the submittal requirements of Technical Specification 02210 Site Preservation and Materials Disposal, Article 1.10 Contractor Submittals.)

4. Tunnel Ancillary Systems Work Plans – With narratives, calculations, graphs, tables and Working Sketches for:

   a. Power, lighting, and ventilation systems; dust control systems; air monitoring system; electrical power systems; and temporary and backup power provisions.

b. Temporary spoil stockpile and disposal plans. Provide a tunnel spoil handling plan, including anticipated daily production volume, Working Sketches layout and description of spoil handling equipment, details of stockpiling locations and procedures, and disposal procedures.

c. Construction layout areas for entry access portals, including all major equipment and staging areas. Show on the Working Sketches, at a minimum, the layout of the tunnel equipment (i.e., crane and fan locations, etc.), Contractor's office(s), dry house, parking areas, shops, equipment parking and repair areas, materials lay down areas, muck handling area, and any other staging areas.

5. Safety and Health Plan

a. A site-specific tunnel safety plan for Cal-OSHA, Mining and Tunneling Division, which is in compliance with all applicable Cal-OSHA and Fed-OSHA regulations.

b. The names and experience (copies of résumés and licenses and certifications) of the Underground Safety Representative and Gas Testers.

6. Reports and Records

a. Daily Shift Logs and Reports – construction logs and reports, on a daily basis, for review-and-record. For all tunneling repair/rehabilitation operations, include, at a minimum, the shift supervisor, the hours worked for the shift, name and craft of each employee on shift, each task and total man-hours for each employee, the production quantities and rates, the tunnel ground reinforcement and minor modifications to work procedures, installed, equipment breakdowns and repairs, and delays – description and hours – in progress.

b. Survey Records – Upon request by the Engineer for review-and-record.

7. Safety and Health Documentation

a. A written listing of Project lost times, reportable injuries/illnesses, medical cases and accident near-misses, on a weekly basis

b. A written brief on status and instruction on safety and health for both the public and Project personnel, e.g., weekly safety toolbox meetings, etc.

c. Documentation sent to Cal-OSHA, e.g., accident and incident reports, citation abatements, variance requests, etc., concerning the Project, accident investigations, etc.

d. Documents given or sent to the Contractor from Cal-OSHA, e.g., citations, permits, variances, abatements, etc.

8. Schedules

a. A baseline schedule and monthly updated schedules for tunnel repair/rehabilitation and Project related work identifying all major construction activities as independent items. Include, as a minimum, the following activities: mobilization, equipment set-up, tunnel activities, equipment tear-down, and demobilization. Also, include planned working hours for each activity, and a written description of the construction method and equipment to be employed during each activity.

b. Look ahead/Look Behind Schedule showing two (2) weeks of planned activities – Look Ahead – and one (1) week of progress – Look Behind – on a weekly basis. (These schedules may be incorporated into the submittal requirements to General Requirements Specification 01200 Project Management, Administration and Facilities Operation and 01320 Progress and Schedules – Article 1.10.)

1.11 SPECIAL CONDITIONS AND REQUIREMENTS (NOT USED)

PART 2 - PRODUCTS

2.01 CONSTRUCTION EQUIPMENT

A. All mechanical ventilation fans shall be reversible and MSHA and, or Cal-OSHA permissible, as required by Cal-OSHA.

B. All mechanical ventilation duct material may either be steel, fiberglass or spiral wound bag cloth. Duct shall not be made of PVC, HDPE or other toxic-producing plastics or resins when burned. Duct shall not collapse when the fan is reversible; therefore, bag line shall not be used.

C. Mobile Equipment

1. Diesel or electric powered – If used underground, in a potentially gassy or in a gassy operation, shall be either approved by MSHA and, or Cal-OSHA in accordance with requirement of 30CFR Part 36 (formerly Schedule 31), or shall be demonstrated to be fully equivalent to MSHA and, or Cal-OSHA-permissible equipment, as required by Cal-OSHA.

2. Diesel Powered – If used underground in a non-gassy operation, shall be either approved by MSHA and, or Cal-OSHA in accordance with the provisions of 30 CFR Part 32 (formerly Schedule 24), or shall be demonstrated to be fully equivalent to MSHA and, or Cal-OSHA approved equipment.

D. Gasoline or propane powered equipment and tools shall not be used in the tunnel under any circumstances.

PART 3 - EXECUTION

3.01 PREPARATIONS

A. The Contractor shall execute the following before proceeding with the tunnel repair/ rehabilitation work:

1. Submittals – Provide the Engineer with the organization, and project brief pre-construction submittals for his review-and-acceptance.

2. Safety and Health Plan – Provide Cal-OSHA with the Contractors site specific tunnel safety plan with copies to the Engineer for his review-and-record.

3. Pre-job Safety Conference – Arrange and conduct a pre-job safety conference with Cal-OSHA and the Engineer in attendance. Notify the Engineer of the time and place of the conference at least three working days in advance.

4. Tunnel Walk Through and Conference – conduct a tunnel walk-through (to the extent that can be performed safely) and conference with the Engineer and Owner. The Contractor's supervisors and engineers, and Underground Safety Representatives shall attend the walk through and conference.

5. Inspection and Preventative Actions – Thoroughly inspect the tunnel and perform rock scaling and other temporary preventative actions.

6. Notifications – Notify and provide necessary location and emergency information to:

• Stanislaus County Sheriff	209-525-7114
• California Highway Patrol (Modesto office)	209-545-7440
• Oakdale Rural Fire Department	209-881-3358
• Stanislaus Regional 911 Service (Oakdale Police)	209-847-2231
Wendy Silva, Deputy Director of Operations	209-552-3900
• Cal-OSHA Mining and Tunneling Unit	916-574-2540
• Stanislaus County Office of Emergency Services	209-525-4658
• Oak Valley Hospital	209-847-3011

3.02 SAFE AND HEALTHY WORK ENVIRONMENT

A. Mechanical Ventilation and Air Quality

1. Operate when personnel are underground the temporary mechanical ventilation system and monitor the tunnel atmosphere according to contractor's Safety plan. Operate and maintain a mechanical ventilation system that provides a sufficient supply of fresh air and maintains an atmosphere free of toxic or flammable gasses and dusts in all underground work areas. Do not rely on natural air ventilation. Natural air ventilation can be used only to supplement mechanical air ventilation.

2. Conduct all underground operations by methods, means and equipment, which will positively control dust, fumes, vapors, gases, fibers, fogs, mists or other atmospheric impurities in accordance with Cal-OSHA and Fed-OSHA requirements.

3. Monitor and perform procedures and document underground air quality and ventilation performance in accordance with Cal-OSHA and Fed-OSHA regulatory requirements, and/or Tunnel classification and special conditions issued by Cal-OSHA. Inform the Engineer of any policy and/or procedure changes. Submit to the Engineer copies of inspection and monitoring documentation on a weekly basis.

4. Install, provide, operate and maintain for the duration of tunnel repair/ rehabilitation a temporary mechanical ventilation system and an air quality monitoring system, which conforms to the requirements of Cal-OSHA and Fed-OSHA.

5. If required, all ventilation fans shall comply with Stanislaus County noise pollution requirements. If required, provide fan silencers as needed to comply with County noise restrictions. Remove ventilation system from the site when the Work is completed.

B. Illumination – Provide, operate, and maintain for the duration of construction operations temporary lighting systems, which conform to the requirements of all federal, state, and local laws. The bear minimum lighting shall be as follows:

Location	Foot-candles
Tunnel and shafts at heading or work areas	10
Tunnel away from heading or work areas	5
Shaft away from heading or work area	0
Tunnel portal outside and inside for 100 feet	10
Shaft collar outside for 100 foot radius	10
Shaft bottom for 100 feet each direction	5
Underground and surface shop areas	10
Dry house, toilets, offices, etc.	10
General construction area	5

1. Supply every person underground an operable, MSHA permissible cap lamp or flashlight. All underground and surface construction areas shall have sufficient lighting to ensure proper performance and inspection of the Work. Tunnel portal and shaft collar surface lighting shall comply with Stanislaus county light pollution requirements.

C. Ground Stability – Maintain the stability of the ground around the periphery of the tunnel by scaling and using temporary ground support.

D. Noise and Dust Control – Control noise and dust inside and outside the tunnel and shafts in accordance with applicable federal, state and local regulations.

E. Communications

1. Tunnel – Provide power-assisted, wire and phone communications, i.e., MSHA-permissible mine telephone system, from the tunnel portals to the heading and to each work area.

F. Housekeeping – Maintain clean working areas and conditions at all times underground, and beyond the tunnel portals and around the shaft collars. Remove all spoil, grout spills, unused timber, and all material not required for tunnel repair/ rehabilitation and associated construction.

G. Ground Movement and Support

1. Perform tunnel repair/rehabilitation in a manner that will avoid or at least minimize ground movements, subsidence and loss of ground, and avoid or at least minimize settlement of the ground surface, structures, and utilities above and adjacent to the tunnel. Use positive control methods and means to prevent loss of ground and surface settlement and heave.

2. Support the ground continuously in a manner that will prevent loss of ground and maintain the stability of the tunnel and shafts' perimeter.

H. Fire – Perform the tunnel repair/rehabilitation Work in accordance with applicable fire prevention and control ordinances and regulations required by Fed-OSHA, Cal-OSHA and the jurisdictional Fire Department within Stanislaus County. Notify the Fire Department of Contractor's work areas and emergency information.

3.03 GENERAL REQUIREMENTS

A. Access – Provide access and assistance, i.e., limited labor, equipment and materials, for the Engineer to observe, inspect and test the Work, to perform independent line and grade surveys, to map the geology, to monitor any geotechnical instrumentation, to install additional instrumentation, and to conduct necessary visitor tours as deemed necessary by the Engineer.

B. Production and Emergency Work Hours – Prosecute tunnel Work in accordance and during the working hours established for the Project. Notify the Engineer at least three (3) workdays in advance of a proposed change in working hours, except in emergency conditions. Under emergency conditions, notify the Engineer and the Owner as soon as possible.

C. Emergency Work Stoppages – In case of emergency or work stoppages likely to endanger the stability of the tunnel or adjacent structures, maintain a full work force 24 hours per day, including weekends and holidays, until the emergency or hazardous conditions no longer jeopardize stability and safety of the Work.

D. Permit Conditions – Perform Work in accordance with permit conditions. Have current copies of required permits on site at all times.

E. Utilities and Facilities – Provide all temporary necessary utilities and facilities, (i.e., electrical power and distribution, construction and potable water, pumps and distribution, communications – telephone and bells and alarms – drainage and dewatering pumps and distribution, lighting systems, sanitary facilities and sewer distribution, etc.) required to complete the tunnel repair/rehabilitation Work.

3.04 TUNNEL SCALING AND INVERT CLEANING

A. The Contractor shall execute the following:

1. Scaling – Scale loose rock from the tunnel back and ribs.

2. Temporary Ground Support – During or after inspection and scaling, determine for safety reasons if temporary ground reinforcement or other support is needed. Install temporary ground reinforcement or other

temporary ground support. (Temporary or additional ground reinforcement is at no cost to the Owner unless the Engineer directs and authorizes such.)

3. Tight Removal – To reduce the quantities of shotcrete applied to tunnel arch and ribs and of concrete placed in the tunnel invert, the Engineer requires rock tights removal. Therefore, remove any rock protrusion points and/or areas into the tunnel as directed by the Engineer. Tights may be removed by excavation chipping, and/or chemical breaking methods and means.

4. Invert Cleaning – Thoroughly clean the tunnel invert using compressed air and water – blow pipe, or by other Engineer accepted means. Remove all loose material – mud, sand, gravel and cobbles – from shallow and deep pockets and grooves in the sound rock invert. Prior to placing mudmat or invert concrete, have the Engineer inspect and release invert subgrade for concrete.

5. Muck and Spoil – Remove and dispose of all muck, spoil, loose and cementitious materials from the tunnel in accordance with local, State and Federal regulations, and in accordance with any special requirements and reviewed-and-accepted Contractor submittals. Materials not removed from the site at the end of each work shift shall be stockpiled and covered with weighed-down tarps or plastic sheeting to minimize dust and erosion.

3.05 FIELD QUALITY CONTROL

A. Refer to Technical Specification Section 02320 Earthwork.

3.06 TUNNEL DEMOBILIZATION AND CLEAN-UP

A. Punch List – Perform the Work to remove items from the Engineer – Contractor punch list.

B. Utilities – remove all of the Contractor’s utilities from the tunnel and portals prior to Substantial Completion.

C. Mechanical Ventilation System – Remove all mechanical ventilation components – fans and ventilation duct – from the tunnel and portals prior to Substantial Completion.

D. Acceptance – Clean the tunnel and portals and surrounding area of all debris. Conduct a final walk-through with the Engineer and Owner prior to Substantial Completion, for turn-over back to Owner and irrigation water release into the Canal.

E. Refer to Technical Specification Section 02210 Site Preservation and Materials Disposal.

PART 4 - MEASUREMENT AND PAYMENT

4.01 METHOD OF MEASUREMENT

A. Tunnel excavation/re-shaping shall be measured as a percentage complete and accepted by the Engineer.

B. Tunnel invert grading shall be measured as a percentage complete and accepted by the Engineer.

C. Dewatering shall be measured as a percentage complete and accepted by the Engineer.

D. Refer to Technical Specification 02210 Site Preservation and Material Disposal for muck and spoil disposal.

4.02 BASIS OF PAYMENT

A. Completed tunnel excavation/re-shaping scaling shall be paid as a percentage complete of the Contract lump sum (LS) price.

B. Completed tunnel invert grading, preparation and backfill shall be paid as a percentage complete of the Contract lump sum (LS) price.

C. Completed dewatering shall be paid as a percentage complete of the Contract lump sum (LS) price.

D. All other Work outlined in this Technical Specification Section is considered incidental; therefore, not subject for payment, or is paid from under another Technical Specification Section.

- END OF SECTION 02415 -

X:\Project\3000_prj\3818R OID Tunnel 8\Reports\Contract Docs_Specs\DIV 02\02415 Tunnel Repair Using Mobile Equipment 20210721.docx

ATTACHMENT A
Tunnel Classification Letter

STATE OF CALIFORNIA GAVIN NEWSOM., Governor

DEPARTMENT OF INDUSTRIAL RELATIONS
DIVISION OF OCCUPATIONAL SAFETY AND HEALTH
MINING AND TUNNELING UNIT
1750 Howe Avenue, Suite 450
Sacramento, California 95825
DoshMTsac@dir.ca.gov

Telephone (916) 574-2540
FAX (916) 574-2542

January 8, 2019

Oakdale Irrigation District
1205 East F Street
Oakdale, CA 95361

Attention: Scott Lewis

Subject: Project: 21073 – South Main Canal Tunnel No. 8 Rehabilitation, Stanislaus County
Classification: Non Gassy With Special Conditions
Number Attached: 1 (A)

The information provided to this office relative to the above project has been reviewed. On the basis of this analysis, an Underground Classification of "Non-Gassy With Special Conditions" has been assigned to the tunnel identified on your submittal. Please retain the original Classification for your records and deliver a true and correct copy of the Classification to the tunnel contractor for posting at the job site.

When the contractor who will be performing the work is selected, please advise them to notify this office to schedule the mandated Pre-Job Conference with the Division prior to commencing any activity associated with boring of the tunnel(s). A Pre-Job Request Form is enclosed.

Should you have another bore under construction that is not required to have an Underground Classification (i.e.: less than 30 inches in diameter), please contact the Mining and Tunneling Unit prior to any employee entry of such a space.

If you have any questions on this subject, please contact this office at your earliest convenience.

Sincerely,

Jeffrey Wallace
Senior Safety Engineer

enc: Classification
Pre-Job Request Form

cc: slewis@condorearth.com

State of California

Department of Industrial Relations

DIVISION OF OCCUPATIONAL SAFETY AND HEALTH
MINING AND TUNNELING UNIT

Underground Classification

21073A099CT OAKDALE IRRIGATION DISTRICT

of 1205 EAST F STREET, OAKDALE, CA 95361

at SOUTH MAIN CANAL TUNNEL NO. 8 REHABILITATION

has been classified as *** NON GASSY WITH SPECIAL CONDITIONS ***

as required by the California Labor Code § 7955.

The Division shall be notified if sufficient quantities of flammable gas or vapors have been encountered underground. Classifications are based on the California Labor Code Part 9, Tunnel Safety Orders and Mine Safety Orders.

SPECIAL CONDITIONS

1. **Positive mechanical ventilation shall be provided at any time a person is required, or allowed, to enter the tunnel, and at any other location where it is required for employee safety and health.**
2. **Positive mechanical ventilation air velocity and air quality to be checked at least every 4 hours.**

Line the tunnel invert and side walls and enlarge the South Main Canal No.8 Tunnel to a minimum of 11.75-feet-wide, maximum 12-feet-wide and a minimum 11-feet-high, maximum 12-feet-high for a total length of 610 linear feet. Location: Upstream Portal: 37.810679, -120.658604; Downstream Portal: 37.809356, -120.659876, approximately 0.9 miles southeast of Knights Ferry, Stanislaus County

This classification shall be conspicuously posted at the place of employment.

Jeffrey Wallace, Senior Safety Engineer

June 22, 2021

State of California
Department of Industrial Relations
Division of Occupational Safety & Health

REQUEST FOR PRE-JOB (TUNNEL)

ATTACH COPY OF CLASSIFICATION AND DIESEL PERMIT

Company Name: _____

Phone _____ FAX: _____

DATE FAXED: _____

PLEASE NOTE: THE BORING CONTRACTOR SHOULD SCHEDULE THE PREJOB AS FAR IN ADVANCE AS POSSIBLE – AT LEAST 3-4 DAYS IN ADVANCE. THE DIVISION REQUIRES THE JOB TO BE SET UP WHEN THE FIELD ENGINEER ARRIVES FOR THE PREJOB. THIS MEANS THAT THE BORE PIT HAS BEEN DUG AND PROPERLY GUARDED, THE CRANE IS IN PLACE AND READY TO LIFT, THE BORING MACHINE IS IN THE PIT AND READY TO GO, AND THE CREW IS READY TO BEGIN BORING THE TUNNEL. IF THERE IS A DELAY IN SETTING UP THE JOB, THE BORING CONTRACTOR SHOULD CONTACT THE DIVISION IMMEDIATELY.

PRE-JOB REQUEST DATE & TIME: _____

ON-SITE SUPERVISOR & CELL NO.: _____

CLASSIFICATION #: _____ **DIESEL PERMIT #:** _____

BORE DIAMETER AND LENGTH: _____ (Diameter) _____ (Length)

IS BORE ENTRY ANTICIPATED? **YES** **NO**
(Circle One)

You MUST contact the Division if entry is planned, REGARDLESS of the bore diameter.

MANNER OF EXCAVATION: _____

_____

JOB-SITE LOCATION AND DIRECTIONS: _____

_____

_____

GENERAL CONTRACTOR: _____

SUBMITTED BY: _____

REVIEWED BY: _____ **DATE:** _____

☐ *Mining & Tunneling Unit, District 1*
1750 Howe Ave., Suite 450
Sacramento, California 95825-2400
(916) 574-2540; ***FAX: (916) 574-2542***

☐ *Mining & Tunneling Unit, District 2*
6150 Van Nuys Blvd., Suite 310
Van Nuys, California 91401-3333
(818) 901-5420; ***FAX: (818) 901-5579***

☐ *Mining & Tunneling Unit, District 3*
464 West Fourth Street, Suite 354
San Bernardino, California 92401-1442
(909) 383-6782; ***FAX: (909) 388-7132***

SECTION 02490

TUNNEL GROUND REINFORCEMENT

PART 1 - GENERAL

1.01 SCOPE

A. Work Specified – This Technical Specification Section includes the requirements for furnishing, installing and testing ground reinforcement anchors, i.e., rock bolts, rock dowels, soil nails, rebar spiles and their accessories for the reinforcement of hard rock, soft rock and soft ground tunnels.

B. Work Inclusions – The Work shall include all labor, materials, equipment and incidentals to perform the Work outlined and/or specified in this Section.

1.02 BACKGROUND AND JOB CONDITIONS

A. The ground in Tunnel 8 may be hard rock (hard cobbles in softer matrix), soft rock, highly weathered and fractured rock and minor soil seams. The tunnel's invert, ribs and crown have been eroded from the flow of irrigation water through it over the years.

B. Due to the uncertain nature of the actual ground conditions encountered, cement-grouted and resin encapsulated rock dowels/bolts have been shown on the Contract Drawings.

C. Installation of rock dowels shall be continuously monitored by the Engineer. Pull testing of cement-grouted dowels is not anticipated.

D. Rock dowels and/or bolts shall be installed at locations as directed by the Engineer for permanent ground support, based on actual ground conditions encountered. Rock dowels/bolts will only be used on an as-needed basis (actual quantity installed will likely vary from bid quantity).

1.03 DEFINITIONS

A. Anchor – Anchor is a ground reinforcement device, that 1) requires a hole to be drilled into rock or soil, 2) that has an anchor bar sheeve or tube of steel, fiberglass or other tension capable material, 3) that is encapsulated with polyester-resin or cement grout or not encapsulated, 4) that develops friction or expansion against the hole in the ground, and 5) that may have the anchor bar initially tensioned or not. Rock bolts, rock dowels, soil nails, and friction anchors are considered ground reinforcement anchors.

B. Rock Bolts – Fabricated steel or fiberglass bars or rods placed in drill holes in rock and "tensioned" between an anchor in base of the hole and the bearing plate assembly at the collar of the hole. The anchor devices may be expansion steel shells or polyester-resin. The bearing plate assembly is a steel plate with a center hole, flat and/or beveled washers, and a nut on the threaded bar. A rock bolt is fully encapsulated with cement or polyester-resin around the annulus between anchor bar and the rock around the drilled hole. A rock bolt is tensioned before the slower set polyester-resin hardens or before the cement is injected into the drill hole.

C. Rock Dowel – Similar to rock bolts but are left "untensioned" after installation. The anchor bar may be made of steel, fiberglass or other materials that have tension strength capacities. Rock dowels normally do not have anchor devises at the base of their drill hole. Rock dowels traditionally have bearing plate assemblies at the collar of the hole, but some do not or are modified.

D. Friction Anchor – Rock stabilizers that are driven into a rock drill hole, i.e., Split-Sets® and other trade names, or are expanded inside a rock drill hole, i.e., Swellex® and Ωmega®.

E. Spiling and Spile – Rock dowels or soil nails installed nearly horizontal to the underground excavation's back or ribs.

F. Spot Anchor or Reinforcement – A location, length and orientation for an installation of a ground reinforcement device. A "spot" anchor may be installed by the Contractor for safety protection of personnel and equipment. A "spot" anchor location for permanent, long-term protection of the facility will be directed by the Engineer. The "spot" anchor or rock bolt locations may or may not be shown on the Contract Drawings.

G. Pattern Anchor or Reinforcement – A systematic layout of ground reinforcement devices. The layout shall be defined to location, spacing, length, size, orientation and other aspects in this Technical Specification as statements and/or schedules, or in the Contract Drawings as illustrations, schedules and/or notes.

1.04 SPECIFICATIONS, CODES, STANDARDS AND REPORTS

A. General – Unless otherwise revised, altered, modified and/or stated in this Specification Section or Related Work Specification Sections, the Contractor shall comply with the following Specifications, Codes, Standards and Reports, and their latest published edition:

1. American Society of Testing and Materials (ASTM)

A36	Standard Specification for Carbon Structural Steel
A185	Standard Specification for Steel Welded Wire Reinforcement, Plain, for Concrete
A615	Standard Specification for Deformed and Plain Billet – Steel Bars for Concrete Reinforcement
A934	Standard Specification for Epoxy-Coated Prefabricated Steel Reinforcing Bars
C94	Standard Specification for Ready-Mixed Concrete
C144	Standard Specification for Aggregate for Masonry Mortar
C150	Standard Specification for Portland Cement
C494	Standard Specification for Chemical Admixtures for Concrete
C579	Standard Test Methods for Compressive Strength of Chemical Resistant Mortars, Grouts, Monolithic Surfacings and Polymer Concretes
C618	Standard Specification for Cal Fly Ash and Raw or Calcined Natural Pozzolan for use as a Mineral Admixture in Concrete
F432	Standard Specification for Roof and Rock Bolt and Accessories

2. Post-Tension Institute (PTI)

PTI Post –Tensioning Manual

1.05 RELATED SPECIFICATION SECTIONS

01200	Project Management, Administration and Facilities Operation
01250	Quality Assurance and Quality Control
01320	Progress and Schedules
01330	Submittals
02280	Erosion, Sediment and Pollution Control
02290	Storm Water Management
02415	Tunnel Repair Using Mobile Equipment

1.06 DESIGN PARAMETERS:

The Contractor shall perform the following:

A. Provide sufficient labor, equipment, and material to install and support the testing equipment and to remove the testing equipment after the testing is complete.

B. The Design Test Load – The design test load (DTL) for one (1) inch diameter (No. 8), 75 ksi resin rock bolts is 35,300 lbs, which is sixty percent (60%) of the minimum yield strength of the anchor bars specified.

C. Resin Encapsulated Rock Bolt Performance Testing – Prior to installation of specified resin encapsulated rock bolts in the tunnel, install and pull test a minimum of four (4) test rock bolts to verify the end resin anchorage requirements. Test rock bolts that are a minimum of eight (8) feet long and are installed in rock inside the tunnel. If all four rock bolts pass the test, no additional performance tests are required. If not, continue performance testing by changing the parameters (number of high speed "fast-set" cartridges, drill hole diameter, drill spin/drive method, etc.) until four consecutive tests are successfully performed with the same parameters. Start the performance testing using 3 feet length equivalent of high speed "fast-set" polyester-resin cartridges. DO NOT use lower speed "slow-set" polyester-resin during the performance testing. Perform the pull tests in accordance with Article 3.06 "Proof Testing Of Installed Resin Encapsulated Rock Bolts," of this Technical Specification using the following modified procedure. After the "fast-set" polyester-resin has completely set, apply an initial tension to the steel bar of one (1) kip and take an initial displacement reading. Increase the tension in increments of five (5) kips, maintaining the load for 1 to 1½ minutes after each increment and recording the displacement. Tension bar up to eighty percent (80%)of the yield strength (47.1 kips for No. 8 Grade 75 bars). For test acceptance, a resin encapsulated rock bolt shall be considered to have failed if the total bar head movement is in excess of one (1) inch and continues to occur at or below eighty percent (80%) of the yield strength of the anchor bar.

D. Torque-Tension Relationship Demonstration – Using calibrated torque wrenches, develop a torque-tension relationship based on site test demonstration of a minimum of the four (4) successful rock bolts demonstrated above. Use a hydraulic center-hole pull jack, calibrated pressure (6-inch diameter) gage and calibrated torque wrench(es) for the demonstration. Assemble test hardware onto demonstration rock bolts. Test each rock bolt as follows: 1) Apply an initial tension load of ten (10) kips using hydraulic center-hole pull jack; 2) Apply a torque equal to the pull force, i.e., until the rock bolt nut starts to turn (do not lubricate nut and bar threads, torque in dry condition); 3) Increase tension load in bolt in five (5) kip increments up to a tension load of eighty percent (80%) of the yield strength of the anchor bar; 4) Record torque required to obtain each incremental pull load; 5) Release the load in bolt and repeat procedure, as second torque; 6) Present data in graphical format with data identified in two groups, first torque and second torque for all four resin rock bolts. Calibrate at least two torque wrenches on all four successful rock bolts; 7) From graphical and statistical analysis determine the torque within ± five (5) feet lbs to be applied in field "production" to apply a tension equal to seventy percent (70%) of the yield strength to the anchor bar; 8) Submit the results to the Engineer for "review-and-acceptance."

E. No performance testing shall be required for cement encapsulated rock dowels installed inside the tunnel.

1.07 QUALITY CONTROL AND ASSURANCE REQUIREMENTS

A. Installer Qualifications – The Contractor shall use experienced installers who are specialized in installing rock bolts, rock dowels and soil nails identical or similar to those required for this Project. The persons shall have at least two (2) years' experience installing ground anchors in an underground environment, i.e., tunnels, mines, shafts and caverns.

B. General – Refer to General Requirements Specification Section 01250 "Quality Assurance and Quality Control."

C. Survey Work – For pattern reinforcement, the Contractor shall lay out each reinforcement device to the location and orientation required before drilling the holes for "review-and-acceptance" by the Engineer. Record actual measurements of each drilled anchor's location and orientation, hole diameter, drilled and anchor length, type of anchor installed, deviations from specified tolerances, and other specified data.

D. Spot Locations – The Contractor shall "spot" locate with the Engineers agreement before drilling hole(s). Record actual measurements of each drilled anchor location and orientation, hole diameter, drilled hole and anchor length, type of anchor installed, deviations from specified tolerances, and other specified data.

1.08 SAFETY AND SECURITY REQUIREMENTS

A. Work Compliance – All Work shall be done in compliance with all applicable federal and state safety and health regulations (Fed-OSHA and Cal-OSHA).

B. Applicable Regulations – California Code Regulations, Title 8, Chapter 4 – Division of Industrial Safety Orders (Cal-OSHA), Subchapter 4 – Construction Safety Orders (Sections 1500 – 1938), Subchapter 7 – General Industry Safety Orders (Sections 3200 – 6184), and Subchapter 20 – Tunnel Safety Orders (Sections 8400 – 8568) are the most applicable regulations for this Section.

C. Underground Work Safety – Refer to Technical Specification Section 02415 Tunnel Repair Using Mobile Equipment.

D. Engineer and Owner Safety Responsibilities – Both the Engineer and the Owner will perform their Work (e.g., observations, inspections, quality assurance testing, etc.) under the Contractor's Safety and Health Policies and Injury and Illness Prevention Program.

E. The Contractor shall be responsible for initial, temporary ground support. Non-payment for friction stabilizers, expansion anchor rock bolt/dowels, straps and other unspecified ground support does not relieve the Contractor for personnel safety and equipment/materials protection against rock or ground falls.

1.09 ENVIRONMENTAL REQUIREMENTS

A. General – Refer to Technical Specification Sections 02280 Erosion, Sediment and Pollution Control and 02290 Storm Water Management.

1.10 CONTRACTOR SUBMITTALS

A. Pre-Construction Phase – The Contractor shall submit to the Engineer for "review-and-acceptance" the following before the Work outlined in this Technical Specification Section can begin.

1. Company Qualifications – The Contractor and/or its Subcontractor specified in Article 1.07 Quality Control and Assurance Requirements shall demonstrate their capabilities and experience. Therefore, provide a listing of completed projects with project names and addresses, contact names, physical and email addresses and telephone numbers of engineers and owners, and additional information as specified.

2. Installer Qualifications – Provide résumés with references of Project Work qualifying the persons as ground reinforcement installers.

3. Product Data – For each type of product specified, provide "catalog cuts" and/or specification literature. Include for anchor bars, base-of-hole hardware, collar hardware, and polyester-resin and cement grout (with admixtures) encapsulating materials. Also include drilling and grouting equipment with systematic Working Sketches showing component layout.

4. Work Plan – Provide a Work Plan with Working Sketches detailing materials and equipment to be utilized and the method, sequence and timing of installation, tensioning and testing of rock bolts with regard to the sequence of excavation and lining.

5. Working Sketches – Provide the details for anchor bars, centralizers, grout tubes, end plates, washers and nuts, extension shells, etc., and narrative notes on assembly and placement. Also, provide drilling and grouting equipment layouts.

6. Cement Grout Design Mix – Provide mix and test results for cement grout for anchor encapsulation for rock dowels.

7. "Pattern" anchor layout Working Sketches showing locations and orientations.

8. Pull test jack and pressure gauge/load cell certified calibration chart.

9. Torque wrenches certified calibration charts for rock bolts.

10. Anchor installations report format(s).

B. Construction Phase – The Contractor shall submit to the Engineer for "review-and-information" the following on a routine basis:

1. Certified mill report(s) for each bundle of anchor bars.

2. Manufacturer's certification for other hardware, and materials used for ground reinforcement certifying that the individual products meet the requirements specified.

3. Anchor installation reports on a daily basis.

4. Performance Test Results – The Contractor shall submit within one week:

a. Copies of completed test results for the resin encapsulated rock bolt performance tests and torque-tension relationship tests.

C. Close-out Phase – The Contractor shall submit to the Engineer for "review-and-acceptance" the following before final payment:

1. As-built Contract Drawing of "pattern" and "spot" of resin rock bolts and cement rock dowels. Show locations, depths, and orientations.

1.11 SPECIAL CONDITIONS AND REQUIREMENTS – (NOT USED)

PART 2 - PRODUCTS

2.01 PERMANENT MATERIALS

A. General – The Contractor shall use components from Williams Form Engineering or Dywidag Systems International for both resin rock bolting and cement rock doweling. The Contractor may use components from one of two accepted manufacturers for resin rock bolting and other manufacturer's components for cement rock doweling. The Contractor may use components from one of two accepted manufacturers for resin rock doweling. The Contractor shall not "mix-and-match" different manufacturer's components between resin rock bolts and cement rock dowels. If of equal product quality, upon "review-and-acceptance" by

the Engineer, the Contractor may use another manufacturer/supplier for both or either resin rock bolt and cement rock dowel systems.

B. Anchor Bars, Rock Bolts, and Dowels

1. Steel Bar – Resin Rock Bolts and Cement Rock Dowels – Nominal 1-inch diameter (No. 8), Grade 75 ksi steel yield strength ≥59.3 kips, ultimate strength ≥79.0 kips, continuous threaded bar, conforming to ASTM A615.

2. Epoxy Coating – Coat with epoxy all anchor bars according to ASTM A934, using 3M Scotch 426 or equal fusion bond. The epoxy coating around the bar shall be between 7 to 9 mil thickness.

3. Beveled Ends – For resin encapsulated rock bolts and dowels, bevel the anchorage end at 45° angle prior to epoxy coating.

4. Other Bar Materials – Fiberglass or other tension capable materials may not be substituted for the steel anchor bar material.

5. Bar Surfaces – Clean the surface of the anchor steel bars of scale, rust, dirt, and other foreign before epoxy coating and before installation.

C. Anchor Bar Accessories

1. Bar Accessories – Furnish complete steel anchor bars with necessary accessories as follows:

	Resin Rock Bolts	Cement Rock Dowels
Bearing Plates (domed or bell)	Yes	Optional
Bearing Plated (flat)	No	Yes
Flat Washers	No	Yes
Beveled Washers	No	Yes
Hemispherical Washers	Yes	Optional
Nuts	Yes	Yes
Centralizers	No	Yes

2. Steel bearing plates – Provide a minimum ⅜-inch thick, 6x6 inches square, conforming to ASTM A36. The hole in the steel bearing plate shall be centered and of sufficient size to eliminate binding of the anchor bar. The center hole shall be at least ⅛-inch larger than the anchor bar overall diameter selected. For cement rock dowels, appropriately sized holes for injection of cement grout, for effective air release and for the anchor bar encapsulation shall be placed on the plates. The plates shall be fully epoxy coated as per ASTM A934. Epoxy coating shall be between 7 to 9 mil thickness.

3. Steel washers – Provide quenched tempered and hardened steel washers, conforming to ASTM F-436. Hard steel washers shall be at least 2 inches diameter. Provide an appropriate number of ⅛-inch thick flat, and ⅛-inch to ⅜-inch thick beveled and hemispherical washers to adjust bearing plates to surfaces. All washers shall be fully epoxy coated as per ASTM A 934. Epoxy coating shall be between 7 to 9 mil thickness.

4. Anchor Nuts – Provide heavy duty hexagonal head nuts only. (Square head nuts are not acceptable). The anchor nuts shall be either ductile iron, conforming to ASTM A-521, Grade 80-55-06, or steel, conforming to ASTM A-108. The anchor nuts shall develop at least 125 percent of the yield strength and at least 100 percent of the ultimate strength of the selected anchor bar. All anchor nuts shall be fully epoxy coated per ASTM A934. Epoxy coating shall be between 7 to 9 mil thickness.

5. Lubricant – Use molybdenum disulfide base grease (Molykote G from Alpha Molykote Corp., or equal) on all anchor bar and nut thread, and washer surfaces.

6. Centralizer – For cement rock dowels only, use polyvinyl chloride (PVC) centralizers Class 200 conforming to ASTM D-2241 or heavy-duty Schedule 40 conforming to ASTM D-1785, from Williams Form Engineering or equal manufacturer.

D. Polyester-Resin Cartridges – For resin rock bolts, the Contractor shall provide or use the following products:

1. Manufacturers or Suppliers – Use Lokset® resin cartridges manufactured by Minova, resin cartridges supplied by Dywidag Systems International or Williams Form Engineering, or equal.

2. Two components polyester-resin cartridges shall have the following properties:

a. Cartridge Casing – Constructed of saturated polyester providing optimum resistance to moisture, but easily fractured to enable complete mixing during installation.

b. Resin – High strength unsaturated polyester with the predominance of non-reactive, inorganic filler.

c. Catalyst – Material containing peroxide with inorganic, non-reactive filler.

d. Mixture Properties – Thixotropic and viscous properties to permit adequate mixing of materials by spinning and pushing the anchor

bar into place, and to prevent the mixture from running out of the hole during and after mixing.

e. Gel times:

1. Gel and cure time of "fast-set" polyester-resin shall be sufficient to permit rock bolt tensioning within 10 minutes or as recommended by the resin manufacturer or supplier for the particular application. Cartridges shall be marked, tagged and/or color coded for "fast-set" application.

2. Gel time of "slow-set" polyester-resin shall be between 30 and 90 minutes. Cure time may be 8 to 72 hours. Cartridges shall be marked, tagged and/or color coded for "slow-set" application.

f. Strength when mixed and cured:

1. Compressive strength at least 12,600 psi.

2. Tensile strength at least 3,200 psi.

3. Unconfined shear strength at least 7,500 psi.

E. Cement Grout Materials and Mix – For cement rock dowels, the Contractor shall use the following components:

1. Portland Cement ASTM C150, Type I or II.

2. Water Potable, complying with ASTM C94 requirements.

3. Admixtures – Provide admixtures certified by the manufacturer to be compatible with grout mix and other admixtures. Contain not more than 0.1 percent chloride ions by weight of Portland cement or total cementitious materials.

a. Water-Reducing Admixture: ASTM C494, Type A

b. Super Plasticizer: ASTM C494, Type F

c. Water-Reducing and Accelerating Admixture: ASTM C494, Type E

d. Water-Reducing and Retarding Admixture: ASTM C494, Type D

4. Grout Mix Water – Cement Ratio – Use 4.75 gallons of water or less per sack of cement (94 lbs), w/c $\leq$ 0.42. If a stiffer mix can be placed or pumped

into the drill hole, use a water/cement ratio of less than 0.42. Admixtures may be used to reduce water/cement ratio and to aid pumping grout into the drill hole.

5. Grout Strength – A minimum compressive strength of 3,000 psi in 7 days and 4,000 psi in 28 days using 2 x 4-inch cylinder molds.

F. Cement Grout Tubing – Use polyvinylchloride (PVC) high density polyethylene (HDPE) or low-density polyethylene (LDPE) tubing, having a wall thickness of 1/16 inches and a nominal diameter of ½ inch or larger. Use tubing for pumping cement grout and for releasing trapped air (de-airing).

G. Collar Seal – Use quickset mortar or sand/cement dry pack to seal drill hole collar and anchor bar annular, and to create a base for the bearing plate. Do not use polyurethane foam or other non-cementitious materials to pack into the drill hole.

H. Friction and Expansion Anchors – The Contractor may install friction and/or shell, bail and sledge drive, expansion anchors, stabilizers, i.e., Split-set®, Swellex®, Ωmega® and other ground reinforcement anchors not specified in the above products. These installations are installed for the Contractor's additional safety to personnel equipment and operations, and for the Contractor's convenience and for temporary use. These or other products not specified and installed shall be subject for non-payment.

I. Welded Wire Fabric (wire mesh) – Conform to ASTM A185 for plain fabric and ASTM A497 for deformed fabric.

J. Chain Link Mesh – Chain link mesh shall not be used for payment or allowance.

K. Strap – Steel mat, "bacon-strip," amphibious landing mat, "monster mat," and mesh strip shall not be used for payment or allowance.

2.02 CONSTRUCTION EQUIPMENT

The Contractor shall provide the following specified equipment:

A. Drilling Equipment – Use drills and associated equipment capable of drilling holes at any forward, upward and downward orientation. The equipment shall be able to operate in small working areas less than 6-foot high and 6-foot wide. The drilling equipment shall be capable of drilling 1½ to 3-inch diameter, 9-foot minimum long drill holes in the size and shape of tunnel shown on the Contract Drawings.

B. Grouting Equipment – Use a grout pump plant that 1) has a +30 gallon mixing tank, which will mix at least two sacks of grout material; 2) has a +15 gallon holding tank for continuous pumping; 3) uses a Mayno type, positive displacement pump for constant pressure and output rate; 4) is powered by either electricity or

compressed air; 5) will pump variable rates from 0.5 to 8.0 gallons per minute at 150-psi pressure; 6) has pressure regulator and two "liquid-use" pressure gauges (one at the pump and one at the hole); 7) has ¾ inch ID by +25-ft rubber hoses for injection and return grout, with locking fittings; and 8) has an injection/return valving manifold at the injection point.

2.03 CONSTRUCTION TESTING EQUIPMENT AND INSTRUMENTS

The Contractor shall provide the following specified testing equipment and instruments:

A. Calibrated Jack Test Units

1. Suitably sized (10 and 20 ton) hollow ram jacks that have the following: adjustable bearing truss frames or yokes for aligning direction of pull with centerline of bolt, an extension bar for attaching the jack to the anchor bar, and hydraulic pumps with 6-inch face pressure gauge calibrated to read directly in pounds of ram jacks being used. Displacement indicator gauges that read in increments of 0.001 inch over a range of at least two (2) inches, with magnetic or independent dial indicator-strain gauge mountings. Other necessary accessories.

2. Calibrate the pump gauge while connected to the jack by testing the machine before performing pull tests and at subsequent times as directed during the construction period.

3. Ready access to spare parts for testing equipment, especially gauges and pump seals, so that work will not be delayed.

PART 3 - EXECUTION

3.01 PREPARATIONS

The Contractor shall execute the following:

A. Pre-Production Work – The Contractor shall perform the following before installing production resin rock bolts or cement rock dowels:

1. Submit pre-construction submittals for each type of ground support (i.e., resin rock bolts or cement rock dowels) and obtain approval of these submittals from the Engineer.

2. Complete successfully the resin rock bolt performance tests and the torque-tension calibration demonstrations.

B. "Pre-Anchor" Conference: The Contractor and the Engineer shall jointly conduct a pre-construction conference at the Project site specifically on installing and testing tunnel ground reinforcement; if applicable, comply with the requirements in Section 01200 Project Management, Administration and Facilities.

C. Structure Protection – Protect structures and other facilities from damage caused by settlement, lateral movement, vibration, and other hazards created by ground reinforcement operations.

3.02 GENERAL

The Contractor shall execute the following:

A. For underground excavation of ground which requires reinforcement, install ground anchors within the distance and time specified on the Contract Drawings and/or this Technical Specification Section for each type of tunnel reinforcement.

B. After each exposure of ground surface, examine the surface and confirm that the ground anchor pattern and/or "spotting" to be installed will be adequate. Provide ground reinforcement that is adequate at all times to ensure safety of personnel and construction operations.

C. Drill holes into the ground of the depth and diameter necessary to accommodate the ground anchor and to give an anchorage consistent with the type and length shown on the Contract Drawings and the Contractor's "reviewed-and-accepted" Work Plan and Working Sketches. Clean holes of drill cuttings, sludge, and debris.

D. Remove any protective grease from anchor bar threads and nuts.

E. Apply lubricant to anchor bar threads and between washers and nuts.

F. Use bevel and/or hemispherical washers between the bearing plate and a flat washer to provide a full bearing surface, for the nut perpendicular to the anchor bar.

3.03 TRANSPORTATION AND HANDLING PROCEDURES FOR ALL GROUND ANCHORS

The Contractor shall execute the following:

A. Use multiple pickup points (a spreader beam is recommended for this purpose) to decrease the possibility of cantilever deflections and sagging between pickup points during transportation loading/unloading operations, movements to installation sites and insertion into prepared anchorage holes. Anchor bars that are shipped in bundles or as individual bars should not be dropped, dragged, or pulled off a transportation vehicle.

B. If field cutting is required, cut only the exposed threaded section of the anchor bars with a portable band saw or an abrasive cutoff wheel that will not generate overheating of the area of the bars where internal threaded tension components are intended for use. The use of a cutting torch is prohibited.

C. Repair the exposed end of the anchor bar that has been field cut with an epoxy coating patch kit from the manufacturer.

D. Do not weld the steel anchor bars together or use internal threaded couplers unless shown on the Contract Drawings or "reviewed-and-accepted" by the Engineer.

E. Do not use the anchor bars as grounding for electric welding apparatus.

F. On anchor bars that have been severely bent, nicked, cut, compressed (flattened in the thread section down to the minor diameter) or bars that are worn out due to other uses, misuse, or have external threads corroded with permanent pitting, inspect for damage on them to determine if strength capacities are diminished. If the anchor bars have been previously tensioned beyond their rated yield strength, discard them.

3.04 INSTALLATION OF RESIN ENCAPSULATED ROCK BOLTS

The Contractor shall execute the following:

A. After drilling and cleaning of holes has been completed, insert the number of polyester-resin cartridges required to completely encapsulate the anchor bar. Use the number of "fast-set" cartridges required for anchorage, as determined in Article 1.06.C "Resin Encapsulated Rock Bolt Performance Testing" and use "slow-set" cartridges for the balance of the hole. Avoid rupturing of the cartridge castings prior to inserting the anchor bar.

B. To rupture the cartridges and mix the polyester-resin, insert and rotate the anchor bar into the drilled hole. Insert at a penetration rate between 1½ and 2 inches per second through the cartridges. Rotate the anchor bar between 50 and 100 rotations per minute throughout the penetration period. Rotate the anchor bar for additional five (5) to ten (10) seconds, but not more than twenty (20) seconds, after the anchor bar tip reaches the base of the hole. Leave anchor undisturbed for ten (10) minutes allowing "fast-set" resin to cure. (The Contractor shall verify these rates and times during performance testing.)

C. Apply tension as determined by Article 1.06.D "Torque-Tension Relationship Demonstration" after the recommended cure time for the "fast-set" epoxy-resin has elapsed, but before the gel time for the "slow-set" epoxy-resin has elapsed.

3.05 PROOF TESTING OF INSTALLED RESIN ENCAPSULATED ROCK BOLTS

The Contractor shall execute the following:

A. Coordination

1. Coordinate with the Engineer's testing and inspection personnel to expedite the Work.

2. Notify Engineer at least forty-eight (48) hours before ground anchorages are ready for testing and inspection.

3. Visually inspect every resin rock bolt with the Engineer.

B. Proof Testing

1. Conduct proof tests on installed resin rock bolts with the Engineer present, as specified by this Technical Specification Section and the Contract Drawings, and/or as directed by the Engineer.

2. Perform testing to:

a) Measure collar hardware assembly to rock fastening compression and displacement.

b) Verify that the specified tension can be sustained by the resin rock bolt, and that the anchorage can be held without yield of the anchor bar, the rock and/or the polyester-resin.

c) Check the polyester-resin mixing and encapsulation procedures.

3. Proof test resin encapsulated rock bolts as follows:

a) Use the calibrated torque wrenches to tension the rock bolt.

b) Proof test every installed resin encapsulated rock bolt.

c) Perform proof test using a calibrated torque wrench immediately after recommended cure time for "fast-set" polyester-resin has elapsed, but before gel time for "slow-set" polyester-resin has elapsed.

d) Tension the resin encapsulated rock bolt to seventy percent (70%) of yield strength of the anchor bar (41.2 kips for a No. 8 (1 inch) 75 ksi anchor bar) and maintain load for three (3) minutes. The rock

bolt shall be considered satisfactory if the load can be maintained for three (3) minutes.

e) Lock off satisfactorily proof tested resin encapsulated rock bolts at seventy percent (70%) of the yield strength of the anchor bar (41.2 kips for a No. 8 Grade 75 bar).

3.06 INSTALLATION OF CEMENT GROUTED ROCK DOWELS

The Contractor shall execute the following:

A. Drill Holes – Drill holes in rock three (3) inch in diameter. Drill the holes in conditions varying from severely weathered to hard rock (cobbles) in softer matrix. Drill the holes in location and angle tolerance within six (6) inches and three degrees (3°) of locations and orientations shown on the Contract Drawings, or "spotted" by the Engineer. Overdrill the hole length by twelve (12) inches.

B. Hole Cleaning – After completing the hole drilling, clean the drill hole thoroughly with compressed air (+50 psi air pressure) to remove from the hole drill cuttings, sludge, debris, mud and water.

C. Anchor Bar Collar Assembly

1. Inspect the anchor bar and accessories for epoxy coating and general damage. Repair or discard damaged items.

2. Lubricate anchor bar nuts and threads and bearing surface on washers.

3. Check threading on anchor bars with nuts.

4. Place bevel washers where needed between the bearing plate and the nut to insure uniform bearing of the bearing plate on the rock or shotcrete surface. Place flat washer between the nut and the bevel washers.

D. Centralizers – Install drill hole centralizers along anchor bars. Space centralizers one and one-half (1½) feet from the collar assembly, every eight (8) feet or fraction thereof, along the anchor bar and one and one-half (1½) feet from the anchor bar tip. Two (2) centralizers are needed for eight (8) to twelve (12) foot long cement rock dowels, three (3) for fourteen (14) to eighteen (18) foot bars, and four (4) for twenty (20) to twenty-four (24) foot bars. Centralizers shall be installed along the length of anchor bars to ensure that the bar will be centered in the drill hole and that minimum grout cover encapsulates the anchor bar.

E. Grout Injection and Air Release Tubes – Secure grout tubes for injection and de-airing to anchor bars as shown on the Contract Drawings.

F. Grout Hook Up and Pumping – 1) Use grouting pump and associated equipment as specified under Article 2.02.B. 2) Hook up to rock dowel – grout inspection tube. 3) Use a grout quick release, pass-by arrangement at hook-up point. 4) Pump grout having the water/cement ratio specified under Article 2.01.E.5. 5) Pump and fill drill hole/anchor bar annulus completely until all trapped air is released and until the grout return is the same consistency as the injected mix from the de-air, return tube. 6) If leaks occur from the drill hole collar or into fissures or voids in the ground, "top-off" hole as needed to achieve full grout encapsulation. 7) Bearing plates – Fill rock/shotcrete irregularities as needed with dry pack mortar; or apply shotcrete and, while still wet, place the bearing plate against the shotcrete to provide a uniform bearing surface for the bearing plates.

G. After grout has fully set, torque the tension anchor nuts against bearing plates to one hundred (100) feet-lbs.

3.07 INSPECTION OF CEMENT ENCAPSULATED ROCK DOWEL INSTALLATION

A. Coordination

1. Coordinate with the Engineer's inspection personnel to expedite the Work.

2. Notify Engineer at least forty-eight (48) hours before rock dowel installation for inspection.

3. Visually inspect the entire installation process of every cement rock dowel with the Engineer.

B. Proof Testing

1. No proof testing shall be required for cement encapsulated rock dowels installed inside the tunnel.

3.08 GROUND ANCHORAGE FAILURES

The Contractor shall execute the following for resin rock bolts:

A. For testing purposes, if the outward movement of the anchor bar moves in excess of 1 inch and continues to move at or below the tension specified, consider that the resin rock bolt has failed.

B. For "production" torque-wrench tensioning purposes, if the torque determined cannot be attained and the rock bolt continues to move at or below the torque determined, consider that the resin rock bolt has failed.

C. Replace rock bolts that have failed to meet the specified pull test loads or the determined torque limit requirements.

D. Replace all ground reinforcement that have failed in accordance with this Technical Specification Section.

E. Jack pull testing and torque-wrench testing for quality control shall be considered incidental to production resin rock bolt and cement rock dowel installations, and therefore, shall not be subject for payment.

3.09 FIELD QUALITY CONTROL

A. The Work covered by this Technical Specification Section shall be performed under the observation of the Engineer.

B. The Engineer and the Engineer's Materials Testing Laboratory will be present at the site intermittently to observe the Work and to perform field and laboratory tests to evaluate material quality. The Contractor shall cooperate with the Engineer and the Materials Testing Laboratory in performing the observations and tests. At the completion of their work, the Engineer and Materials Testing Laboratory shall submit reports, including a tabulation of items observed and tests performed. The Engineer's and the Engineer's Materials Testing Laboratory's costs for observing and testing the repair of unsatisfactory work performed shall be backcharged to the Contractor.

C. If the Contractor should fail to meet the technical or design requirements embodied this Technical Specifications Section or the applicable Contract Drawings, he shall make the necessary readjustments until Work is deemed satisfactory, as determined by the Engineer. No deviation from the Specifications shall be made except by "review-and-written acceptance" from the Engineer.

D. The Engineer shall periodically observe drilling of the ground reinforcement holes.

E. The Engineer shall continuously observe installation of the anchor bars, including materials, placement into the holes, and grouting.

F. The Engineer shall take samples of the grout, two (2) inches. by four (4) inches. cylinders of cement grout, at least once during each shift when cement grouting is taking place, or more frequently if the grout mix is changed during the shift. One (1) cylinder shall be tested for compressive strength at an age of seven (7) days and two (2) cylinders shall be tested for compressive strength at an age of twenty-eight (28) days.

G. The Engineer shall continuously observe testing of ground reinforcement as described in this Technical Specification Section.

3.10 DISPOSAL OF MATERIALS – The Contractor shall execute the following:

A. Remove surplus materials and wastes, and legally dispose of them off the Owner's property and easement.

B. Refer to Technical Specifications Section 02210 Site Preservation and Materials Disposal.

PART 4 - MEASUREMENT AND PAYMENT

4.01 METHOD OF MEASUREMENT

A. Rock dowels shall be actual count each (EA) for payment.

B. Wire mesh and friction anchors shall be measured by the square foot (SF) of the combined system installed.

C. Other tunnel ground reinforcement shall not be paid, except for those items of Work paid from another Technical Specification, and shall be considered incidental to the Work, unless otherwise as allowed by the Engineer.

4.02 BASIS OF PAYMENT

A. Rock dowels shall be paid at the Contract unit price per each (EA).

B. Wire mesh and friction anchors shall be paid at the Contract unit price per square foot (SF).

C. All other work outlined in this Technical Specification Section is considered incidental, and therefore is not subject to payment, or is paid for under another Technical Specification Section.

- END OF SECTION 02490 -

X:\Project\3000_prj\3818R OID Tunnel 8\Reports\Contract Docs_Specs\DIV 02\02490 Tunnel Ground Reinforcement 20210721.docx

DIVISION 03

SECTION 03300

CONCRETE CAST-IN-PLACE

PART 1 - GENERAL

1.01 SCOPE

A. Specified Work – This Specification Section outlines and specifies the requirements, as shown on the Contract Drawings, for supply and placement of cast-in-place concrete, including batching and mixing fiber reinforcement.

B. Work Inclusions – The Work shall include all labor, materials, equipment, and incidentals to perform the Work outlined and specified in this Section.

1.02 BACKGROUND AND SITE CONDITIONS (NOT USED)

1.03 DEFINITIONS

A. Concrete Placement Shop Drawings – Shop drawings prepared by the Contractor that show all reinforcement and embeds (piping, conduits, drains, water stops, anchor bolts, etc. that are embedded in the concrete) and their as-built locations in the concrete placement. The forming, shoring and false work may or may not be shown on the Shop Drawings. After revisions and verification, the Concrete Placement Shop Drawings are submitted by the Contractor and incorporated into the as-built drawings.

B. Canal Water – Water routed into the South Main Canal from the Stanislaus River at Goodwin Dam.

C. Engineer's Materials Testing Laboratory – Engineer's Materials Testing Laboratory that performs the Field Quality Control Testing.

D. Independent Materials Testing Laboratory – Materials testing laboratory that is not owned and/or operated by the Contractor or Subcontractors performing concrete or shotcrete work. The laboratory must be certified in accordance with ASTM C1077 and E329. Cost of testing performed in the field and the laboratory for the Contractor's purposes is billed directly to the Contractor. Cost of testing design mixes for the Contractor and/or Contractor's subcontractor(s) is billed to the Contractor.

E. Synthetic Fiber – Synthetic structural fiber reinforcement for concrete.

1.04 SPECIFICATIONS, CODES, STANDARDS AND REPORTS

A. General – Unless otherwise altered, modified, and/or stated in this Specification Section or Related Specification Sections, the Contractor shall comply with the following Specifications, Codes, Standards and Reports and their latest published edition:

1. American Concrete Institute (ACI) – Manual of Concrete Practice

No.	Title
212	Chemical Admixtures for Concrete
304	Guide for Measuring, Mixing, Transporting and Placing Concrete
304.2R	Placing Concrete by Pumping Methods
305	Hot Weather Concreting
306	Cold Weather Concreting
308	Standard Practice for Curing Concrete
318	Building Code Requirements for Reinforced Concrete
347	Guide to Formwork for Concrete

2. American Society for Materials and Testing (ASTM)

No.	Title
A185	Standard Specification for Steel Welded Wire Reinforcement, Plain, for Concrete
A497	Specification for Steel Welded Wire Fabric, Deformed, for Concrete Reinforcement
A615	Standard Specification for Deformed and Plain Billet – Steel Bars for Concrete Reinforcement
A820	Standard Specification for Steel Fibers for Fiber-Reinforced Cement
C31	Practice for Making and Coring Concrete Test Specimens in the Field
C33	Specification for Concrete Aggregates
C39	Test Method for Compressive Strength of Cylindrical Concrete Specimens
C42	Test Method for Obtaining and Testing Drilled Cores and Sawed Beams of Concrete
C94	Standard Specification for Ready-Mixed Concrete
C143	Test Method for Slump of Hydraulic Cement Concrete
C150	Standard Specification for Portland Cement
C171	Specification for Sheet Materials for Curing Concrete
C231	Test method for Air Content of Freshly Mixed Concrete by the Pressure Method
C260	Specification for Air-Entraining Admixtures for Concrete

C309	Specification for Liquid-Membrane Forming Compounds for Curing Concrete
C311	Standard Test Methods for Sampling and Testing Fly Ash or Natural Pozzolans for use as a Mineral Admixture in Portland Cement Concrete
C494	Specification for Chemical Admixtures for Concrete
C618	Standard Specification for Cal Fly Ash and Raw or Calcined Natural Pozzolan for use as a Mineral Admixture in Concrete
C1116	Standard Specification for Fiber-Reinforced Concrete and Shotcrete
D412	Test Methods for Rubber Properties in Tension
D624	Test Method for Rubber Property-Tear Resistance
D1751	Specification for Preformed Expansion Joint Filler for Concrete Paving and Structural Construction
D1752	Specification for Preformed Sponge Rubber and Cork Expansion Joint Fillers for Concrete Paving and Structural Construction

3. Concrete Reinforcing Steel Institute (CRSI) Manual of Standard Practice

4. State of California, Department of Transportation (Caltrans), Manual of Test Methods, Volumes 1, 2 and 3 Standard Test Methods

Test	Title
417	Testing of Soils and Waters for Sulfate Content
422	Testing of Soils and Waters for Chloride Content

5. Army Corps of Engineers (Corps)

Test No.	Title
CRD-C572	Polyvinyl Chloride Waterstops
CRD-C588	Nonshrink Grout

6. American Association of State Highway and Transportation Officials (AASHTO)

Test No.	Title
M182	Burlap Cloth made from Jute or Kenaf

7. California Building Code (CBC), California Code of Regulations, Title 24, Part 2, Volumes 1 and 2, latest edition

8. State of California, Department of Transportation (Caltrans) Standard Specifications, latest edition

9. OID Standard Specifications and Drawings

1.05 RELATED SPECIFICATION SECTIONS

01200	Project Management, Administration and Facilities Operation
01250	Quality Control and Assurance
01320	Progress and Schedules
01330	Submittals
02210	Site Preservation and Materials Disposal
02280	Erosion, Sediment and Pollution Control
02290	Stormwater Management

1.06 DESIGN PARAMETERS

A. Concrete Mix Designs

1. Concrete Mix Designs shall be prepared for each type and strength of concrete shown on the Contract Drawings and listed in Article 2.22.C of this Specification Section.

2. Production Design Mix(es): Concrete mix designs, after being tested and finalized, shall meet the compressive strengths shown on the Contract Drawing and listed in this Specification Section.

3. Design-Mix Adjustments: Subject to compliance requirements, concrete design-mix adjustments may be proposed when the characteristics of materials, Project conditions, weather, test results, or other circumstances warrant, and after "review-and-acceptance" by the Engineer.

1.07 QUALITY CONTROL AND ASSURANCE REQUIREMENTS

A. General – Refer to General Requirements Specification Section 01250 Quality Control and Assurance.

B. Concrete Mix Testing – Concrete mix design quality control testing will be performed on the concrete by the Supplier, Contractor, and/or an Independent Materials Testing Laboratory hired by the Supplier or Contractor, as needed to verify the design strength of the mix. These data shall be submitted to the Engineer for "review-and-acceptance" prior to starting of the Work.

1. Strength Testing – Test cylinders shall be in accordance with ASTM C39.

2. Slump – Determine concrete slump by ASTM C143.

3. Air Entrainment – Determine air content of the concrete using ASTM C231.

4. Concrete Strength – The average concrete strength value shall meet the strength test requirements of ASTM C94.

C. Testing at Concrete Batch Plant – By the Supplier, Contractor, and/or an Independent Materials Testing Laboratory hired by the Supplier or Contractor.

1. Test and document aggregate soundness, aggregate gradation and concrete yield.

2. Certify cement.

1.08 SAFETY AND SECURITY REQUIREMENTS

A. Work compliance – All Work shall be done in compliance with all applicable federal and state safety and health regulations (Fed-OSHA and Cal-OSHA).

B. Applicable Regulations – California Code Regulations, Title 8, Chapter 4 Division of Industrial Safety Orders (Cal-OSHA), Subchapter 4 – Construction Safety Orders (Sections 1500 – 1938), and Subchapter 7 – General Industry Safety Orders (Sections 3200 – 6184) are the most applicable regulations for this Section.

C. Engineer and Owner Safety Responsibilities – Both the Engineer and the Owner will perform their Work (e.g., observations, inspections, quality assurance testing, etc.) under the Contractor's Safety and Health Policies and Injury and Illness Prevention Program.

1.09 ENVIRONMENTAL REQUIREMENTS AND PERMITS

A. Permits – The Engineer is unaware of any special permit requirements.

B. Construction and Groundwater – The placement of concrete will cause wasted construction water and infiltrated groundwater to become high in pH. The Contractor may have to treat the construction and groundwater seepage in the canal to lower water's pH before releasing it further downstream.

C. Other Requirements – Refer to Specification Sections 02280 Erosion, Sediment and Pollution Control and 02290 Stormwater Management.

D. Concrete Waste Management – Contractor shall provide concrete waste disposal facilities and post signs as required by the SWPPP. The concrete supplier shall use these facilities to waste concrete and clean-out transit-mixers.

1.10 CONTRACTOR SUBMITTALS

A. Pre-Construction Phase – The Contractor shall submit to the Engineer for "review-and-approval" the following before the Work outlined in this Specification Section can begin:

1. Company Qualifications – Résumés and copies of certifications of Contractor's selected 1) concrete supplier, and 2) Independent Materials Testing Laboratory.

2. Materials – Manufacturer's catalog cuts, data sheets, and descriptive literature for form ties, spreaders, corner formers, form coatings, curing methods, curing materials, curing compound, bond breakers, joint sealant, backing rod, joint filler, epoxy bonding compound, color additive and other admixtures. Compounds that will come in contact with potable water shall be certified by the National Sanitation Foundation (NSF). The Engineer may request other specific material data sheets.

3. Concrete Mix Designs – Provide from the concrete supplier concrete mix designs, which conform to the specified concrete design mix(es) stated in the Contract Drawings and in this Specification Section.

4. Concrete Admixtures – Provide product information sheets and certifications for all concrete admixtures whether or not pre-accepted or in this Specification Section.

5. Aggregate Gradation – Before the initial placement and every five hundred (500) cubic yards (CY) of concrete placements, a report from the Engineer's Independent Materials Testing Laboratory for "review-and-acceptance" verifying that aggregate material conforms to the specified gradations.

6. Concrete mix testing data as listed in Article 1.07.B of this Specification Section.

7. Specified Products – Provide "catalog cuts" data sheets or product literature of all products to be used and outlined under Part 2 "Products," which require "equals" and/or that are not specified.

8. Concrete Pour Cards – Provide a concrete placement notification and sign off format to be used as the "Concrete Pour Card" for each concrete placement. Upon acceptance of the format by the Engineer, the Contractor shall print the format on card paper.

B. Construction Phase – The Contractor shall submit to the Engineer for "review-and-information" the following on a timely, routine basis:

1. Concrete Batch Plant Sampling Reports – Provide materials testing laboratory reports for gradations and soundness of fine and course aggregates, and concrete yield.

2. Batch and Delivery Ticket – Furnish delivery ticket for each load of concrete batched and delivered to the Project Site. The delivery ticket shall provide all information in accordance with ASTM C94, Section 16, Batch Ticket Information. Note concrete slump and temperature and "add water" on the ticket before discharge.

3. Upon completion of each concrete placement, submit to the Engineer via email the filled out "Concrete Pour Card" within forty-eight (48) hours of the placement.

C. Close-Out Phase – The Contractor shall submit to the Engineer for "review-and-acceptance" the following before final payment:

1. Specification deviations, variance and changes.

2. Mix design changes by locations.

3. Concrete compression strength by locations. The Engineer will assist the Contractor in preparing the information to be placed on the Contract Drawings.

1.11 SPECIAL CONDITIONS AND REQUIREMENTS

A. Canal Water – Canal water will not be available for use with concrete.

PART 2 - PRODUCTS

2.01 REINFORCING STEEL

A. Reinforcing steel should conform to the ASTM A615, Grade 60 deformed rebar, except where otherwise specified or indicated on the Contract Drawings.

2.02 CEMENT

A. Cement shall conform to ASTM C150, Type I or II, with a maximum tricalcium aluminate not to exceed 8 percent (8%). The maximum percent alkalis shall not exceed 0.6 percent (0.6%) to prevent or at least to reduce calcium leaching from concrete.

B. Pozzolanic material shall conform to the requirements of ASTM C618, Class N, with the following exceptions:

Sulfur Trioxide (SO_3), maximum percent	4
Pozzolanic activity index –	
With Portland cement, at 28 days, minimum percentage of control	85
With lime, at 7 days, minimum psi	950
Water requirement, maximum, percentage of control	110
Reactivity with cement alkalis –	
Reduction of mortar expansion at 14 days, minimum percent	85

2.03 FLY ASH

A. Fly ash shall be Class C or F conforming to ASTM C618.

2.04 BLAST FURNACE SLAG

A. Blast furnace slag shall be ground granulated, Grade 100 or 120 according to ASTM C989.

2.05 SILICA FUME

A. Silica fume shall be amorphous silica according to ASTM C1240.

2.06 AGGREGATES

A. Aggregates shall comply with ASTM C33 and shall contain less than 1 percent (1%) asbestos by weight or volume and be free from any substances that will react with the cement alkalis. Maximum chloride content for sand shall not exceed 200 mg/l per Caltrans Test Method 422. Obtain aggregate from accepted sources. Submit location(s) of aggregate sourced for acceptance.

2.07 WATER

A. Water shall be free of organic materials and other impurities which might reduce the strength, durability or other quality of the cement mortar. Water shall have pH of 7.0 to 9.0, a maximum chloride concentration of 500 mg/l (per Caltrans Test Method 422), and a maximum sulfate concentration of 500 mg/l (per Caltrans Test Method 417).

2.08 CONCRETE ADMIXTURES

A. Air-entraining admixtures shall conform to ASTM C260, and shall be nontoxic after 30 days and shall contain no chlorides. Admixtures shall be Master Builders MB-AE 10, Sika AER (Sikamix 104), or equal.

B. Water-reducing admixtures shall conform to ASTM C494, Type A or D, shall contain no chlorides, shall be nontoxic after thirty (30) days, and shall be compatible with the air-entraining admixtures. The amount of admixture added to the concrete shall be in accordance with the manufacturer's recommendations. Admixtures shall be Master Builders Pozzolith polymer-type normal setting, Plastocrete (Sikamix 160) Normal Set, Sika Chemical Corporation, or equal.

C. Super-plasticizer admixture shall conform to ACI 212.

D. Batch time extending or set retarding admixture shall conform to ACI 212.

E. Do not use any admixture that contains chlorides or other corrosive elements.

2.09 SYNTHETIC FIBER

A. Fibers shall be intended for use in concrete and conform to ASTM C1116, Type III. Fibers shall have a length of 1.55 inches and an aspect ratio (length divided by the equivalent diameter of the fiber) of 90, such as Strux 90/40 or equal.

2.10 CONCRETE MIX DESIGN

A. Conform to ASTM C94 ready-mixed concrete, except as modified by these specifications.

B. For surface exposed concrete structures, an air-entraining agent shall be used in the concrete mix. For outside concrete structures to contain canal water, an air entraining agent shall be used in the concrete mix. Air content as determined by ASTM C231 shall be three to six percent (3 to 6%).

C. Use classes of concrete as described in the following table:

Class	Type of Work	28-Day Compressive Strength psi	Minimum Content* lb/CY
A	Canal invert	3,000	470 (5 sack)
B	Structures, footings, cradles, supports across pipe trenches, pipe encasements, and concrete not otherwise listed on this table or shown on the Contract Drawings.	3,000	470 (5 sack)
C	Pavement and concrete flatwork (i.e., access roads, sidewalks, curb, etc.)	3,000	470 (5 sack)
F	Lean Mix Concrete (backfill)	1,500	282 (2 sack)

* Minimum content is for cement only by total weight.

D. The nominal maximum aggregate size shall not exceed fifty percent (50%) of the specified concrete cover on reinforcement, nor exceed seventy-five percent (75%) of the clear lateral space between adjacent reinforcement (disregarding laps).

E. Measure slump in accordance with ASTM C143. Slump shall be as indicated below. A tolerance of up to one (1) inch above the indicated maximum will be allowed for individual batches provided the average for all batches or the most recent ten (10) batches tested, whichever is fewer, does not exceed the maximum limit. Concrete of lower than usual slump may be used provided it is properly placed and consolidated.

F. Add Water – Avoid adding additional water to the mix in the field. Add only the amount of water to maintain a proper slump range to allow the concrete pump or other equipment to deliver the mix to the placement area efficiently and consistently. Do not add more than five (5) gallons per cubic yard of batched concrete mix. Thoroughly mix “add water” into the mix before discharging from the mixer. Recheck mix for slump and document slump, before and after adding “add water” and the amount of “add water.”

G. Mixing Time Limit – After adding batch water, each batch load must be placed within ninety (90) minutes, whether additional water is added or not. The Contractor may use admixture(s) to extend the life of the mixed concrete. The admixture must be “reviewed and accepted” by the Engineer prior to use. If an accepted admixture is used and mixing load remains plastic, the mixing time limit shall extend to the time recommended by admixture manufacture, but no longer than one hundred twenty (120) minutes, unless specifically approved otherwise by the Engineer.

Type of Work	Slump (in.) (without super plasticizer)	Variance (in.)	Slump (in.) (with super plasticizer)	Variance (in.)
Canal Invert (non-structural)	3	plus ½, minus 1	6	plus ½, minus 1
Slab on grade or heavy sections wider (in plan view) than 3 feet	2½	plus ½, minus 1	6	plus ½, minus 1½
Footings	3	plus 1, minus 1	5	plus ½, minus 1
Concrete flatwork	2	plus 1, minus 1	4	plus ½, minus ½
Backfill	5	plus 1, minus 1	8	plus ½, minus 1½

2.11 CURING COMPOUND

A. Curing compound shall conform to ASTM C309, Type 1, Class B.

B. Curing compound shall be compatible with required finishes and coatings.

2.12 MATS, PAPER AND SHEETING FOR CURING

A. Burlap mats shall conform to AASHTO M182.

B. Waterproof curing paper and polyethylene sheets shall conform to ASTM C171.

PART 3 - EXECUTION

3.01 PRE-POUR MEETINGS

The Contractor shall execute the following:

A. Arrange to have pre-pour meeting(s) between the Contractor and Engineer before any unique, major, first-time concrete placements. Prior to the meeting, the Contractor shall draft a meeting agenda for the Engineer to “review-and-edit.”

3.02 DELIVERY, STORAGE AND HANDLING

A. Fiber reinforcement shall be supplied in “concrete ready bags,” wrapped in moisture-proof packaging and stored in a dry location to prevent exposure to moisture before introduced to concrete mix.

3.03 EMBEDDED ITEMS

The Contractor shall execute the following:

A. Set anchor bolts and other embedded items accurately and hold securely in position until the concrete is placed and set. Check all special castings, channels, or other

metal parts that are to be embedded in the concrete prior to and again after concreting. Check all nailing blocks, plugs, and strips necessary for the attachment of trim, finish and similar work prior to concreting.

3.04 BEVELED EDGES (CHAMFERS)

The Contractor shall execute the following:

A. Form ¾-inch beveled edges on exposed concrete edges and corners, beam soffit corners, and where indicated on the Contract Drawings, or directed by the Engineer. Reentrant corners in concrete members shall not have fillets, unless otherwise shown in the Contract Drawings. The top edges of slabs, walkways, beams, and walls may be beveled with an edging trowel in lieu of using chamfer strips.

3.05 CONSTRUCTION JOINTS

The Contractor shall execute the following:

A. Provide layout of construction joints as shown on the Contract Drawings and the Engineer "reviewed-and-accepted" shop Concrete placement Shop Drawings.

B. For slabs-on-grade and inverts, use formed construction joints unless otherwise shown on the Contract Drawings or "reviewed-and-accepted" by the Engineer. Allow twelve (12) hours between pours of adjacent slabs. Provide joints as specified or shown.

3.06 REINFORCEMENT

A. Synthetic fibers shall be placed at the application rates shown on the Contract Drawings and in-accordance with the Manufacturer's specifications.

3.07 PLACING CONCRETE

The Contractor shall execute the following:

A. Use a concrete "pour card" for "notification of-and-acceptance" by the Engineer. All reinforcement and formwork must be inspected and accepted by the Engineer prior to releasing concrete at the batch plant in advance of placing concrete. Conform to ACI 304R, unless otherwise directed by the Engineer. Unless otherwise agreed upon, the Engineer will "release-the-pour" for concrete placement.

B. Conform to ACI 304.2R for pumping of concrete.

C. Conform to ACI 305 for placing during hot weather.

D. Conform to ACI 306 for placing during cold weather.

3.08 BONDING TO "OLD" EXISTING CONCRETE

The Contractor shall execute the following:

A. If shown on the Drawings, coat the contact surfaces with epoxy bonding compound. Conform to the manufacturer's printed preparation and application instructions and recommendations.

3.09 CONCRETE FINISHES

A. Finish formed surfaces shown on the Contract Drawings according to the following form or "F" classifications. Formed surfaces shall include all surfaces formed by the use of formwork. Where a formed surface finish is not shown on the Contract Drawings, it is specified below:

Finish	Area
F-1	Buried concrete encasements, concealed surfaces which are to be covered as foundations, or in walls to be strapped and lined.
F-2	All types of interior or exterior surfaces which are not prominently exposed to public inspection and for which no other finishes are specified.

B. Finish the formed surface as follows based on the above "F" classifications:

1. Finish F-1 – Surface where roughness is not objectionable. No surface treatment is required other than repairing defective concrete. Color variations and physical irregularities are permitted.

2. Finish F-2 – Surfaces which provide a surface of thick surface coverings, i.e., plaster concrete skim, etc. Remove abrupt changes exceeding ¼-inch. Remove gradual variations exceeding ½-inch. Fill tie holes and depressions ⅜-inch and deeper.

C. Finish unformed surfaces shown on the Contract Drawings according to the following unformed or "U" classifications. Unformed surfaces include all surfaces formed without the use of formwork, such as pavements and floors. After proper and adequate vibration and tamping, bring all unformed top surfaces of slabs, floors, walls, and curbs to a uniform surface with suitable tools. The classifications of finishes specified for unformed concrete surfaces are as shown below:

Finish	Area
U-1	Grade slabs and foundations to be covered with concrete or fill material. Canal finish.

D. Finish the unformed surface as follows based on the above "U" classifications:

1. Finish U-1 – Sufficient leveling and screeding to produce an even, uniform surface with surface irregularities not to exceed ½-inch. No special finish is required.

3.10 CURING CONCRETE

The Contractor shall execute the following:

A. Conform to ACI 308.

B. Select the appropriate curing methods, curing materials and compounds in response to climatic and site conditions occurring at the time of concrete placement. Take appropriate measures as described in ACI 305 and ACI 306 for protecting and curing concrete during hot and cold weather.

C. If used, keep burlap cloth continuously wet and damp. Do not allow cloth to dry out. Conform to ASSHTO M182 when using burlap cloth for curing.

D. Do not use curing compound on surfaces which are to be coated or painted unless curing compound is completely removed by sand, grit or water blasting.

3.11 REPAIR OF DEFECTS

The Contractor shall execute the following:

A. Do not repair defects until the Engineer has inspected the defects and the Engineer has "reviewed-and-accepted" the site specific repair procedure.

B. Repair surface defects that are smaller than one (1) foot across in any direction and are less than ½-inch in depth by removing the honeycombed and other defective concrete down to sound concrete, make the edges perpendicular to the surface and at least ⅜-inch deep, thoroughly dampen the surface, work into the surface a bonding grout, fill the hole with mortar, match the finish and color on the adjacent concrete, and cure as specified.

C. Repair severe defects that are larger than surface defects but do not affect the structural integrity of the structure by removing the honeycombed and other defective concrete down to sound concrete, make the edges of the hole perpendicular to the surface, sand, grit or water blast the surface, coat the blasted surface with epoxy bonding compound, place non-shrink grout, match the finish and color on the adjacent concrete, and cure as specified.

D. If the defects affect the structural integrity of the structure or if patching does not satisfactorily restore the quality and appearance to the surface, remove and replace all affected areas.

3.12 REPAIR OF CRACKS

The Contractor shall execute the following:

A. Repair cracks in concrete structures that are greater than 1/10-inch in width by cutting out a square edged and uniformly aligned joint ¼-inch wide by ½-inch deep, preparing exposed surfaces of the joint, priming the joint, and applying polyurethane joint sealant.

B. If the crack affects the structural integrity or function of the element, remove and replace all affected areas.

3.13 FIELD QUALITY CONTROL

A. The Work covered by this Specifications Section shall be performed under the observation of the Engineer.

B. The Engineer and the Engineer's Materials Testing Laboratory will be present at the site intermittently to observe, collect samples and test the Work. The Contractor shall cooperate with the Engineer and the Engineer's Materials Testing Laboratory in performing the observations and tests. At the completion of their work, the Engineer and Engineer's Materials Testing Laboratory shall submit reports, including a tabulation of items observed and tests performed. The Engineer's and the Engineer's Materials Testing Laboratory's costs for observing the repair of unsatisfactory work performed shall be back-charged to the Contractor.

C. If the Contractor should fail to meet the technical or design requirements embodied in this Specifications Section or the applicable Contract Drawings, Contractor shall make the necessary readjustments until Work is deemed satisfactory, as determined by the Engineer. No deviation from the Specifications shall be made except by "review-and-written acceptance" from the Engineer.

D. Concrete Testing – Concrete quality testing will be performed on the concrete by the Engineer's Materials Testing Laboratory as follows:

1. Frequency of Sampling – Cast five (5) concrete test cylinders from each fifty (50) cubic yards, or fraction thereof, of each class of concrete placed in any one day. Sampling and curing of cylinders shall conform to ASTM C31.

2. Strength Testing – Test cylinders shall be in accordance with ASTM C39. Test one (1) cylinder at seven (7) days for information; test three (3) cylinders at twenty-eight (28) days for acceptance; and hold one (1) cylinder for verification or 56-day strength. Strength acceptance will be based on the average of the strengths of the three (3) cylinders tested at twenty-eight (28) days. If one (1) cylinder of a twenty-eight (28) day test manifests evidence of improper

sampling, molding, or testing, other than low strength, discard it and use the fifth (5th) cylinder for the test result.

3. Slump – Determine concrete slump by ASTM C143 with each strength test sampling, prior to and after adding "add water" in the field, and as directed by the Engineer to establish consistency.

4. Air Entrainment – If air entraining is required or used, determine air content of the concrete using ASTM C231 to verify the percentage of air in the concrete immediately prior to depositing the concrete in the forms.

5. Concrete Strength – The average concrete strength value shall meet the strength test requirements of ASTM C94.

6. Failure to Meet Design Strength – If the twenty-eight (28) day strength tests fail to meet the specified minimum design compressive strength, the concrete will be assumed to be defective. In this case, one set of three (3) cores from each area shall be taken, as selected by the Engineer, in accordance with ASTM C42. If the average compressive strength of the set of three concrete cores fails to equal eighty-five percent (85%) of the specified minimum design compressive strength, or if a single core has a strength that is less than seventy-five percent (75%) of the minimum design compressive strength, the concrete will be considered defective. The Engineer shall require one or more of the following: additional coring, nondestructive load testing, repair of defective concrete and/or an equitable cost assessment. The Contractor shall pay for costs of coring, testing of cores, load testing, required repairs, and the assessment.

E. Concrete Sampling and Testing

1. Testing Labor – The Engineer's Materials Testing Laboratory shall perform the laboratory testing for the Project.

2. Notification – Advise the Engineer in writing at least two (2) working days in advance of concrete-placing operations to allow for scheduling and performing of the Owner's or Engineer's field quality control testing.

3. Storage Box Area – Contractor to provide and maintain facilities for safe storage of concrete test specimens on the Project Site.

3.14 CLEAN-UP AND RESTORATION

A. During concrete work, provide for adequate disposal of all waste and wastewater. Remove and properly dispose of all waste concrete resulting from concreting operations. Concrete spills shall be minimized and all clean-up of concrete and waste materials shall be performed immediately to avoid damage to the invert. The

contents of concrete lines discharged into the canal in excess of the amount required for the Work shall be considered waste.

B. Refer to Specification Section 02210 Site Preservation and Materials Disposal.

PART 4 - MEASUREMENT AND PAYMENT

4.01 METHOD OF MEASUREMENT

A. Concrete invert shall be measured by the square-foot (SF) as accepted by the Engineer.

B. Concrete footings including soil excavation and off-site disposal of soil concrete debris shall not be measured.

4.02 BASIS FOR PAYMENT

A. Concrete invert shall be paid by the Contract unit price per square-feet (SF) completed, the Contractor is required to provide an acceptable finish surface.

B. All other Work and accessories outlined in this Specification Section is considered incidental, therefore not subject for payment, or is paid for under another Specification Section.

- END OF SECTION 03300 -

X:\Project\3000_prj\3818R OID Tunnel 8\Reports\Contract Docs_Specs\DIV 03\03300 Concrete Cast-In-Place 20210721.docx

SECTION 03470

SHOTCRETE

PART 1 - GENERAL

1.01 SCOPE

A. Specified Work – This Specification Section outlines and specifies the requirements, as shown on the Contract Drawings, for batching, mixing, transporting and applying shotcrete, including batching and mixing fiber reinforcement.

B. Work Inclusions – The Work shall include all labor, materials, equipment, and incidentals to perform the Work outlined and/or specified in this Section.

1.02 BACKGROUND AND SITE CONDITIONS

A. Wet-mix, fiber-reinforced shotcrete will be used for this Project, except as described in Article 1.02.B.

B. Bagged dry-mix shotcrete may be used for patches that are less than or equal to one (1) cubic-yard (CY) per application.

C. Welded wire fabric or other reinforcement shall be as shown on the Drawings or as added in local applications, as directed by the Engineer.

1.03 DEFINITIONS

A. Backfill Shotcrete – The shotcrete volume in excess of the theoretical volume calculated under Section 4.01.B.

B. Canal Water – Water routed into the South Main Canal from the Stanislaus River at Goodwin Dam.

C. Dry Mix Shotcrete – Shotcrete with water added at the nozzle.

D. Engineer’s Materials Testing Laboratory – Engineer’s Materials Testing Laboratory that performs the Field Quality Control Testing.

E. Independent Materials Testing Laboratory – Materials testing laboratory that is not owned and/or operated by the Contractor or Subcontractors performing concrete or shotcrete work. The laboratory must be certified in accordance with ASTM C1077 and E329. Cost of testing performed in the field and the laboratory for the

Contractor's purposes is billed directly to the Contractor. Cost of testing design mixes for the Contractor and/or Contractor's Subcontractor(s) is billed to the Contractor.

F. Fiber-Reinforced Shotcrete – Shotcrete that has been reinforced by adding either steel or synthetic fibers to the wet or dry mix at the mixer.

G. In Situ Core Specimen – A cylindrical core cut from production shotcrete according to ACI procedures.

H. Production Mix Design(s) – Shotcrete mixes that meet the specifications during the test and trail mix phases. Production mix designs have been "reviewed-and-accepted" by the Engineer for production shotcrete. Production mix designs are routinely tested for field quality control and assurance.

I. Production Shotcrete – Payable shotcrete placed according to the Contract Documents.

J. Rebound – The shotcrete material that does not adhere to the applied surface. Rebound mass may range from small particles that ricochet off the surface to large masses that slough off the overhead and vertical surfaces.

K. Shotcrete – Concrete pneumatically projected at a relatively high velocity onto a surface through a nozzle. The concrete mix contains microsilica and/or admixtures intended for attaining quick set, high early strength, and adequate compaction and adhesion. Shotcrete typically has a maximum aggregate size of ⅜-inch.

L. Synthetic Fiber – Synthetic structural fiber reinforcement for shotcrete.

M. Test Panels – A 20-by 20-by 5.5-inch box, with or without reinforcement in it that is leaned against a near-vertical surface or anchored to an overhead surface and filled with shotcrete in the same manner as applying production shotcrete. At the laboratory, test specimens are cored from the shotcrete in the test panel.

N. Test Mix Design(s) – Shotcrete mixes that are batched and tested in the materials testing laboratory using ASTM standard concrete "bench" methods of laboratory batching, mixing and testing.

O. Trial Mix Design(s) – Shotcrete mixes that are batched in the laboratory and that are shot into test panels, cored and/or cut and tested in the materials testing laboratory for strength and other properties.

P. Wet Mix Shotcrete – Shotcrete with water added to the concrete mix before pumping to the nozzle.

1.04 SPECIFICATIONS, CODES, STANDARDS AND REPORTS

A. General – Unless otherwise revised, altered, modified and/or differently stated in this Specification Section or Related Work Specification Sections, the Contractor shall comply to the following Specifications, Codes, Standards and Reports, and their latest published edition:

1. American Concrete Institute (ACI)

211.1	Standard Practice for Selecting Proportions for Normal, Heavyweight and Mass Concrete
301	Specification for Structural Concrete
301	Specification for Structural Concrete for Buildings
506R-05	Guide to Shotcrete
506.2-94	Specification for Shotcrete
506.3R	Guide to Certification of Shotcrete Nozzlemen
506.4R-94	Guide for Evaluation of Shotcrete

2. American Society for Testing and Materials (ASTM)

A185	Steel Welded Wire Reinforcement, Plain, for Concrete Reinforcement (Not Applicable)
A497	Steel Welded Wire Fabric, Deformed, for Concrete Reinforcement (Not Applicable)
C31	Making and Coring Concrete Test Specimens in the Field
C33	Concrete Aggregates
C39	Compressive Strength of Cylindrical Concrete Specimens
C42	Obtaining and Testing Drilled Cores and Sawed Beans of Concrete
C94	Ready-Mixed Concrete
C150	Portland Cement
C192	Making and Curling Concrete Test Specimens in the Laboratory
C260	Air-Entraining Admixtures for Concrete
C494	Chemical Admixtures for Concrete
C618	Standard Specification for Coal Fly Ash and Raw or Calcined Natural Pozzolan for Use as a Mineral Admixture in Concrete
C786	Fineness of Hydraulic Cement and Raw Materials by the 300-Micrometer (No. 50), 150-Micrometer (No. 100), and 75-Micrometer (No. 200) Sieves by Wet Methods.
C1018	Flexural Toughness and First Crack Strength of Fiber-Reinforced Concrete (Using Beam with Third-Point Loading)
C1064	Standard Test Method for temperature of Freshly Mixed Portland Cement Concrete

C1077	Standard Practice for Laboratories Testing Concrete and Concrete aggregates for Use in Construction and Criteria for Laboratory Evaluation
C1102	Time of Setting of Portland Cement Pasts Containing Accelerating Admixtures for Shotcrete by the Use of Gillmore Needles
C1116	Standard Specification for Fiber-Reinforced Concrete and Shotcrete
C1117	Time of Setting of Shotcrete Mixtures by Penetration Resistance
C1140	Preparing and Testing Specimens from Shotcrete Test Panels
C1141	Admixtures for Shotcrete
C1240	Silica Fume
D1889	Turbidity of Water
E329	Independent Laboratory Qualification

3. Concrete Reinforcing Steel Institute (CRSI) Manual of Standard Practice

4. California Building Code (CBC), California Code of Regulations, Title 24, Part 2, Volumes 1 and 2 latest edition

   a. Section 1913 – “Shotcrete” pp 191-192

   b. Table 1704.4

5. State of California, Department of Transportation (Caltrans), Standard Specifications, latest edition

6. OID Standard Specifications and Drawings

1.05 RELATED WORK SPECIFICATION SECTIONS

01200	Project Management, Administration and Facilities
01250	Quality Assurance and Quality Control
01320	Progress and Schedules
01330	Submittals
02210	Site Preservation and Materials Disposal
02230	Clearing and Grubbing
03300	Concrete Cast-in-Place

1.06 DESIGN PARAMETERS

A. Shotcrete Mix Designs

1. Design mixes shall be prepared for each type and strength of shotcrete as follows:

a) Total cement replacement shall be 30 percent or less

b) Total silica fume replacement shall be 13 percent or less

c) If silica fume is used in wet-mix shotcrete then a super-plasticizer is required

2. Aggregate: When used, limit coarse aggregate to a maximum passing screen size of ⅜-inch.

3. Chlorides: Limit water-soluble chloride ions to maximum percentage by weight of cement or cementitious materials permitted by ACI 301.

4. Admixtures: When included in shotcrete design mixes, use admixtures according to manufacturer's written instructions and applicable ASTM Standards.

5. Synthetic Fiber: Uniformly disperse in shotcrete mix, according to manufacturer's written instructions, at a rate shown on the Contract Drawings and "reviewed-and-accepted" by the Engineer.

6. Design-Mix Adjustments: Subject to compliance with requirements, shotcrete design-mix adjustments may be proposed when characteristics of materials, project conditions, weather, test results, or other circumstances warrant, and after "review-and-acceptance" by the Engineer.

7. Production Design Mix(es):

a. Shotcrete mix designs after being tested and finalized shall meet the following compressive strengths versus time:

Unconfined Compressive Strength

Time After	Minimum lbs/in.^{2} (psi)
12 hours	500
72 hours	1,200
7 days	2,500
28 days	4,000

1.07 QUALITY CONTROL AND ASSURANCE REQUIREMENTS

A. Shotcrete Crew Qualifications and Performance

1. The Contractor and/or its Subcontractor shall perform the Work using a firm and individuals regularly engaged in shotcrete work.

2. Nozzle Team: The team shall consist of at least two (2) individuals, both of whom are qualified as nozzleman. Both individuals shall have previous experience in the application of shotcrete on at least two projects of comparable nature, or perform the Work under the immediate supervision of a foreman or instructor with experience of comparable nature. As an alternate qualification and certification, nozzlemen may gain scope and knowledge, and experience by becoming an ACI certified Shotcrete Nozzleman at the Wet-Mix Process Level for Vertical and Overhead Application. (The American Shotcrete Association, telephone (248) 848-3780, web-site www.shotcrete.org, offers shotcrete certifications.)

3. Team Demonstration: Each nozzle team shall demonstrate to the Engineer, by means of trial test panels or sections, acceptable proficiency in uniformity of application of shotcrete of specified quality to vertical test panels before start of the Work to become qualified.

4. Daily Performance Logs: The Contractor shall maintain daily log of work performed by each qualified Shotcrete Nozzle Team. The log shall show Qualified Shotcrete Nozzle Team's names, and production and testing results and include the following information:

   a. Date

   b. Names of team members

   c. Name of Supervisor

   d. Concrete batch tickets or numbers, concrete ages

   e. Location of area shotcreted

   f. Shotcrete testing performed, i.e., test panels, slumps, concrete temperatures

B. Other Requirements – Refer to General Specifications Section 01250 Quality Control and Assurance.

C. Shotcrete Mix Testing – Shotcrete mix design quality control testing will be performed on the concrete by the Supplier, Contractor, and/or an Independent Materials Testing Laboratory hired by the Supplier or Contractor, as needed to verify the design strength of the mix. These data shall be submitted to the Engineer for "review-and-acceptance" prior to starting of the Work.

1. Strength Testing – Test cylinders shall be in accordance with ASTM C39.

2. Slump – Determine shotcrete slump by ASTM C143.

3. Air Entrainment – Determine air content of the shotcrete using ASTM C231.

4. Shotcrete Strength – The average shotcrete strength value shall meet the strength test requirements of ASTM C94.

D. Batch Plant Testing – By the Supplier, Contractor, and/or an Independent Materials Testing Laboratory hired by the Supplier or Contractor.

1. Test and document aggregate soundness, aggregate gradation, and concrete yield.

2. Certify cement.

1.08 SAFETY AND SECURITY REQUIREMENTS

A. Work Compliance – All Work shall be done in compliance with all applicable federal and state safety and health regulations (Fed-OSHA and Cal-OSHA).

B. Applicable Regulations – California Code Regulations, Title 8, Chapter 4 – Division of Industrial Safety Orders (Cal-OSHA), Subchapter 4 – Construction Safety Orders (Sections 1500 – 1938), and Subchapter 7 – General Industry Safety Orders (Sections 3200 – 6148) are the most applicable regulations for this Section.

C. Engineer and Owner Safety Responsibilities – Both the Engineer and the Owner will perform their Work, e.g., observations, inspections, quality assurance testing, etc., under the Contractor's Safety and Health Policies and Injury and Illness Prevention Program.

1.09 ENVIRONMENTAL REQUIREMENTS AND PERMITS

A. Permits – The Engineer is unaware of any special permit requirements.

B. Construction and Groundwater – The application of shotcrete and placement of concrete will cause wasted construction water and infiltrated groundwater to become high in pH. The Contractor may have to treat the construction and groundwater seepage in the canal to lower water's pH before releasing it further downstream.

C. Other Requirements – Refer to Specification Sections 02280 Erosion, Sediment and Pollution Control and 02290 Stormwater Management.

1.10 CONTRACTOR SUBMITTALS

A. Pre-Construction Phase – The Contractor shall submit to the Engineer for "review-and-acceptance" the following prior to the start of work:

1. Personnel Qualifications and Certifications – Provide qualifications, résumés and certifications for shotcrete supervisors and nozzle team members as specified by this Specification Section Article 1.07.A.

2. Surface Preparation – Provide a narrative and sketches describing the methods and means, procedures, sequences, and equipment for preparing various surfaces for shotcrete.

3. Shotcrete Materials

   a. Product Data for manufactured materials and products for shotcrete materials (cement, slag, fly ash, silica fume, sand, coarse aggregate, and synthetic fibers) and admixtures (accelerators, water reducing agents, plasticizers, age extenders, etc.).

   b. Design Mixes for each shotcrete mix, including synthetic fiber rates.

   c. Test Reports for shotcrete materials from team demonstration, shotcrete mix testing, and batch plant testing, as described in Article 1.07.

   d. Other Materials Data for manufactured materials and product used in association with shotcrete, i.e., reinforcement (welded wire fabric and reinforcing steel), curing compounds, etc.

   e. Material Certificates for each material item, signed by manufacturers.

4. Daily Performance Log: Provide a sample copy of a daily performance log for charting production and quality control data. Refer to this Specification Section Article 1.07.A.4.

B. Construction Phase – The Contractor shall submit the following:

1. Daily Performance Log – Provide on a daily basis for "review-and-record" by the Engineer.

C. Close-out Phase – The Contractor shall submit to the Engineer for "review-and-acceptance" the following:

1. As-Built Drawings – Provide on the Contract Drawings

a. The volume, area, and thickness quantities for a unit of measure determined by the Engineer.

b. Specifications deviations, variance and changes.

c. Mix design changes by locations.

d. Shotcrete compression strength by locations. The Engineer will assist the Contractor in preparing the information to be placed on the Contract Drawings.

1.11 SPECIAL CONDITIONS AND REQUIREMENTS

A. Canal Water – Canal water will not be available for use with shotcrete.

PART 2 - PRODUCTS

2.01 CONSTRUCTION EQUIPMENT

A. Pressure Washer – Units capable of spraying water and additives at a pressure of 5,000 psi using a spray wand. The units may be gasoline powered.

2.02 CEMENT

A. Cement shall conform to ASTM C150, Type I or II, with a maximum tricalcium aluminate not to exceed 8 percent (8%). The maximum percent alkalies shall not exceed 0.6 percent (0.6%) to prevent or at least to reduce calcium leaching from concrete.

B. Pozzolanic material shall conform to the requirements of ASTM C618, Class N, with the following exceptions:

Sulfur Trioxide (SO_3), maximum percent	4
Pozzolanic activity index –	
With Portland cement, at 28 days, minimum percentage of control	85
With lime, at 7 days, minimum psi	950
Water requirement, maximum, percentage of control	110
Reactivity with cement alkalies –	
Reduction of mortar expansion at 14 days, minimum percent	85

2.03 FLY ASH

Fly ash shall be either Class C or Class F and shall conform to ASTM C618.

2.04 BLAST FURNACE SLAG

A. Blast furnace slag shall be ground granulated, Grade 100 or 120 according to ASTM C989.

2.05 SILICA FUME

A. Silica fume shall be amorphous silica according to ASTM C1240.

2.06 AGGREGATE

A. The aggregates shall be uniformly well graded and exhibiting no extremes of variation and in accordance with ASTM C33 and ACI 506.2 or R. Use gradation limit No. 2 for synthetic fiber reinforced shotcrete. Use gradation limit No. 1 or No. 2 for non-reinforced shotcrete.

B. Maximum size of aggregate may be varied subject to mix design laboratory testing and field trials, and "review-and-acceptance" by the Engineer. The maximum size shall not exceed ⅜ inch.

C. Specific gravity of the aggregate shall be greater than 2.55.

D. Aggregates shall comply with ASTM C33 and shall contain less than 1 percent (1%) asbestos by weight or volume and be free from any substances that will react with the cement alkalies. Maximum chloride content for sand shall not exceed 200 mg/l per Caltrans Test Method 422. Obtain aggregate from accepted sources. Submit location(s) of aggregate sourced for acceptance.

2.07 WATER

A. Water shall be free of organic materials and other impurities which might reduce the strength, durability or other quality of the cement mortar. Water shall have pH of 7.0 to 9.0, a maximum chloride concentration of 500 mg/l (per Caltrans Test Method 422), and a maximum sulfate concentration of 500 mg/l (per Caltrans Test Method 417) and shall comply with ASTM C94.

2.08 FIBER REINFORCEMENT

A. Synthetic Fiber: Polypropylene/polyethylene fibers engineered and designed for use in shotcrete, complying with ASTM C 1116, type III, not less that 1.5 inches (38 mm) long.

2.09 GROUND WIRE

A. High-strength steel wire, 0.8 to 1 mm in diameter.

2.10 ADMIXTURES

A. General: ASTM C1141, Class A or B, but limited to the following admixture materials. Provide admixtures for wet-mix shotcrete that contains not more than 0.1 percent chloride ions. Certify compatibility of admixtures with each other and with other cementitious materials.

1. Air-Entraining Admixture: ASTM C260.

2. Water-Reducing Admixture: ASTM C494, Type A.

3. Water-Reducing and Retarding Admixture: ASTM C494, Type D.

4. Water-Reducing and Accelerating Admixture: ASTM C494, Type E.

5. High-Range, Water-Reducing Admixture: ASTM C494, Type F.

6. Accelerating Admixture: ASTM C494, Type C (Alkali free).

B. Admixtures in the shotcrete mixes shall conform to ASTM C494, Type E. All shotcrete admixtures shall be “reviewed-and-accepted” by the Engineer.

C. The shotcrete mixes shall contain no materials corrosive to steel or entailing other detrimental effects such as cracking or spalling.

D. Each admixture used in the shotcrete mix(es) shall have a documented history of demonstrable satisfactory performance in the mix(es) of similar proportions.

E. Aluminum-based accelerator admixtures shall not be used.

F. After an admixture has been “reviewed-and-accepted” by the Engineer, the Contractor shall not change the admixture manufacturer and/or brand, without prior “review-and-acceptance” by the Engineer.

G. Liquid accelerator admixtures shall be used. Dry powder accelerator admixtures shall not be used.

2.11 CURING MATERIALS

A. Absorptive Cover: AASHTO M182, Class 2, burlap cloth made from jute or kenaf, weighing approximately 9 oz./sq. yd. (305 g/sq. m) dry.

B. Moisture-Retaining Cover: ASTM C171, polyethylene film or white burlap-polyethylene sheet.

C. Water: Potable.

D. Clear, Waterborne, Membrane-Forming Curing Compound: SATM C309, Type 1, Class B. Shall not leave a visible residue.

2.12 SHOTCRETE EQUIPMENT

A. The wet mix process shall be used, except for conditions described in Article 1.02.B.

B. The Contractor shall use equipment that is capable of thoroughly mixing shotcrete materials in sufficient quantities to maintain continuous placement.

C. The Contractor shall use equipment that is capable of discharging aggregate-cement-water mixture accurately, uniformly and continuously.

2.13 BATCHING AND MIXING EQUIPMENT

A. Wet-Mix Process: Measure, batch, mix and deliver shotcrete according to ASTM C-94 and furnish batch ticket information.

B. Dry-Mix Process: Comply with ASTM C685 when shotcrete ingredients are delivered dry, proportioned, and mixed on-site.

PART 3 - EXECUTION

3.01 PREAPPLICATION – The Contractor shall execute the following:

A. Pre-shotcrete Meeting: Conduct a “pre-shotcrete meeting” on the Project site after the Engineer has “reviewed-and-accepted” field trials and their pre-construction submittals and prior to production shotcrete.

3.02 DELIVERY, STORAGE, AND HANDLING

A. Fiber reinforcement shall be supplied in “concrete ready bags,” wrapped in moisture-proof packaging and stored in a dry location to prevent exposure to moisture before introduced to concrete mix.

3.03 SURFACE PREPARATION – The Contractor shall execute the following:

A. Soil: Clear and grub surface. Remove any residual vegetation growth, i.e., algae, moss, weeds, etc. Compact and trim to line and grade before placing shotcrete. Blow-pipe the surface. Do not place shotcrete on frozen surfaces. Dampen surfaces before shotcreting.

B. Rock: Pressure wash to the satisfaction of the Engineer to remove algae and encrustation, loose materials, mud, and other foreign matter that might weaken shotcrete bonding.

C. Existing Concrete, Shotcrete and Masonry: Before applying shotcrete, remove unsound or loose materials and contaminants that may inhibit shotcrete bonding. Chip or scarify areas to be repaired to the extent necessary to provide sound substrate. Cut edges square and ½-inch deep at perimeter of existing material to taper remaining shoulder at 1:1 slope into cavity to eliminate square shoulders. Dampen surfaces before shotcreting.

1. Abrasive blast or hydroblast any existing surfaces that do not require chipping to remove paint, oil, grease, or other contaminants and to provide roughened surface for proper shotcrete bonding.

2. Provide invert edge preparation as defined in Article 1.03.B of this Specification Section and as shown on the Contract Drawings

D. Steel: Clean steel surfaces by abrasive blasting according to SSPC-SP 6/NACE No. 3, “Commercial Blast Cleaning.”

3.04 STEEL REINFORCEMENT

A. Place reinforcement as indicated in the Contract Drawings as verified by the Engineer or as indicated by the Engineer.

3.05 FIBER REINFORCEMENT

A. Fiber reinforcement shall be placed at the application rates shown on the Contract Drawings and in-accordance with the Manufacturer’s specifications.

3.06 EMBEDDED ITEMS – The Contractor shall execute the following:

A. Embeds: Place and secure anchorage devices and other embedded items required for adjoining work, which is attached to or supported by shotcrete. Use setting sketches, templates, diagrams, instructions and directions furnished with items to be embedded.

3.07 ALIGNMENT AND THICKNESS CONTROL

A. Ground Wires: On planar surfaces, install ground wires to establish thickness and planes of shotcrete surfaces. Install ground wires at corners and offsets not established by forms. Pull ground wires taut and position adjustment devices to permit additional tightening.

B. Gauge Wires or Nails: On irregular surfaces, place + eight (8) inch-long gauge wires or nails against existing surface.

C. For shotcrete-in-place, drive 60d (6-inch) common or box nails into wet-fresh shotcrete to existing surface. Place wires or nails on two (2) foot each direction and high "bump" and low "valley" locations. Measure nominal, minimum, and maximum thicknesses using wires, nails, or pins, or another measure "reviewed-and-accepted" by the Engineer.

3.08 PROPORTIONING AND MIXING

The Contractor shall execute the following:

A. Batch Plant Proportions: Proportion aggregate and cement at the Contractor's selected batching plant that has been "reviewed-and-accepted" by the Engineer. Conform to ACI 21.1, 301 and 506.2 for proportioning.

B. Mixing Time Limit: Apply after adding batch water for each batch load, within ninety (90) minutes, whether additional water is added or not. The Contractor may use admixture(s) to extend the life of the mixed shotcrete. Engineer shall "review-and-accept" the admixture prior to use. If an accepted admixture is used and mixing load remains plastic, the mixing time limit shall extend to the time recommended by admixture manufacturer, but no longer.

C. Accelerator: Accurately proportion accelerating admixtures into the shotcrete wet-mix at the nozzle. Do not introduce the accelerating admixtures into the mix at the pump or at the mixer.

D. Synthetic Fibers: Introduce and thoroughly mix into a shotcrete load the synthetic fibers in accordance with the manufacturer's recommendations and at the rate indicated on the Contract Drawings

E. Slump: Maintain a target slump between three (3) inch and three and one-half (3½) inches at the nozzle.

F. Add Water: Avoid adding additional water to the mixer in the field. Add only the amount of water to maintain a proper slump range to allow the shotcrete pump to deliver the mix to the nozzle efficiently and consistently. Do not add more than three (3) gallons per cubic-yard (CY) of batched shotcrete mix. Thoroughly mix the add-water into the mix before discharge from the mixer. Recheck mix for slump and document slump before and after adding add-water and the amount of add-water added.

3.09 COLD AND HOT WEATHER PROTECTION

The Contractor shall execute the following:

A. Cold Weather Shotcreting: Mix, apply and protect shotcrete from physical damage or reduced strength caused by frost, freezing, or low temperatures, according to ACI 306.1 and as follows:

1. Do not start or discontinue shotcreting when the ambient air temperature is 40ºF and is falling. Uniformly heat water and aggregates before mixing to obtain a shotcrete application temperature of not less than 50ºF and not more than 90ºF.

2. Do not use frozen materials containing ice or snow in the shotcrete mix.

3. Do not apply shotcrete on frozen surfaces or surfaces containing frozen materials.

4. Do not use calcium chloride, salt, and other materials containing antifreeze agents in the shotcrete mix.

B. Hot Weather Shotcreting: Mix, apply and protect shotcrete according to ACI 305R, when hot weather conditions and high temperatures would seriously impair quality and strength of shotcrete, and as follows:

1. Cool the shotcrete mix ingredients before mixing. Maintain shotcrete temperature at time of application below 90ºF for wet mix. Cool the transit mixer drum before adding the mix inside the drum.

2. Substitute ice for all or part of the amount of the design mix water.

3. Decrease temperature of reinforcing steel and receiving surfaces below 100ºF before shotcreting by cold water application or by other means-and-methods.

4. Do not start and discontinue shotcreting when the ambient air temperature is 95ºF and is rising.

3.10 APPLICATION

The Contractor shall execute the following:

A. General

1. Apply shotcrete mix to surfaces (rock, soil, concrete, masonry, shotcrete and/or steel) according to ACI 506.2, unless otherwise specified.

2. Where rebound cannot escape or cannot be blown free, fill corners and other areas with shotcrete first.

3. Hold nozzle at predetermined distance and position. Apply shotcrete perpendicular to surface in small oscillating circles, and at distance to allow maximum compaction consistent with minimum rebound.

4. Shotcrete continuously in multiple passes, to required thickness, without cold joints and laminations developing.

5. Remove, using a compressed air blow pipe or other means, and dispose of rebound and overspray materials during shotcreting to maintain clean surfaces and to prevent rebound entrapment.

6. Maintain reinforcement in position during shotcreting. Place shotcrete to encase reinforcement and other embedded items completely. Maintain steel reinforcement free of overspray and prevent build-up against front face during shotcreting.

7. Use ground wires, measuring pins, wires, nails, crosses, probes, or other means-and-methods to indicate thickness of shotcrete layers. The means-and-methods are subject to "review-and-acceptance" by the Engineer. The measuring devices shall be noncorrosive, and designed to prevent infiltration of water through shotcrete.

8. Deliver and apply shotcrete with uniform consistency; maximize bonding, cohesion and density, and minimize rebound and segregation; prevent sagging, sloughing and dislodging of applied shotcrete.

9. Apply shotcrete to achieve mean "core grades" not exceeding 2.5 according to ACI 506.2, with no single "core grade" exceeding 3.0.

10. Apply shotcrete without exceeding installation tolerances permitted by ACI 117R, increased by a factor of 2.

11. Do not place subsequent lifts until previous lift of shotcrete is capable of supporting new shotcrete.

12. Remove hardened overspray, rebound, and laitance from reinforcing steel bar, welded wire fabric and shotcrete surfaces to receive additional layers of shotcrete.

13. Do not disturb shotcrete surfaces before beginning finishing operations.

14. Remove ground wires or other alignment control devices after shotcrete placement. Embedded thickness devices shall be left in place.

B. Rebound Protection: Apply temporary protective coverings and protect adjacent surfaces against deposit of rebound and overspray or impact from nozzle stream.

C. Moisten Surfaces: Moisten wood forms and surfaces to receive shotcrete immediately before applying shotcrete. Wood forms having coating do not require moistening.

3.11 SURFACE FINISHES

The Contractor shall execute the following:

A. Gun Finish: Leave the surface untextured and uneven, with the natural sprayed finish. Screeding, troweling or other finishing is not required unless otherwise indicated on the Contract Drawings.

B. Smoothness criteria as shown on the Drawings and/or other Contract Documents.

3.12 CONSTRUCTION AND CONTRACTION JOINTS

The Contractor shall execute the following:

A. Construction Joints: Locate construction joints as shown on the Contract Drawings or as approved by the Engineer. Install construction joints square at joints that are perpendicular to the main reinforcement and with a 1:1 taper at joints that are not subject to compression loads.

B. Contraction Joints: If directed by the Engineer or shown on the Contract Drawings, construct contraction joints in shotcrete using saw cuts ⅛-inch wide by ⅓ shotcrete depth, or by using premolded plastic, hardboard, or fiberboard strip inserts ¼-inch wide by ⅓ shotcrete depth, unless otherwise indicated.

1. Do not cut reinforcement

2. After shotcrete has cured, remove strip inserts and clean groove of loose debris

3. Spacing: Space contraction joints at ten (10) to fifteen (15) feet on center horizontally.

3.13 CURING

The Contractor shall execute the following:

A. Drying Protection: Protect freshly placed shotcrete from premature drying and excessive cold or hot temperatures.

B. Initial Curing: Start initial curing as soon as free water has disappeared from shotcrete surface after placing and finishing.

C. Curing Exposed Surfaces: Cure shotcrete by the following methods:

1. Moisture Curing: Keep surfaces continuously moist for at least seven days with water, continuous water-fog spray, water-saturated absorptive covers, or moisture-retaining covers. Lap and seal sides and ends of covers.

2. Curing Compound: Apply curing compound uniformly in continuous operation by power spray according to manufacturer's written instructions to final surfaces only. Recoat areas subjected to heavy rainfall within three hours after initial application. Maintain continuity of coating and repair damage during curing period.

a. Apply curing compound to gun- or screed-finished shotcrete at a rate of 1 gal./100 sq. ft.

b. Curing compound shall not be used where subsequent shotcrete, gunite, or other cementitious layers are planned.

D. Curing Formed Surfaces: Cure formed shotcrete surfaces by moist curing with forms in place for the full curing period or until forms are removed. If forms are removed, cure form stripped surfaces by the same methods specified above.

3.14 FIELD QUALITY CONTROL

A. Contractor's Responsibility – The Contractor shall execute the following:

1. Production shotcrete "test panel" sampling:

a. Prepare 20- by 20- by 5.5-inch nominal test panels from + ⅜-inch thick plywood and 2- by 6-inch structural light framing lumber. Frame only three (3) sides leaving the bottom "open."

b. Lean test panels against outside wall in a secure position not to collect rebound and slough and not to vibrate during shotcrete shooting.

c. Shoot into test panels, having the same reinforcement as in the structure, for each production shotcrete design mix used, and for each work shift or for each fifty (50) cubic yards of shotcrete applied, but not less than one per shift. Fill the test panels over the perimeter frame and "strike-off" the shotcrete surface even with the perimeter frame.

d. Leave test panel specimen(s) in same curing environment as production shotcrete applied. After twenty-four (24) hours, deliver test panel specimen(s) to the Laydown Area for pick up by the Engineer or the Engineer's Materials Testing Laboratory.

2. Shotcrete Mix and Ambient Air Temperatures: Measure and record shotcrete mix temperature for each load at the shotcrete pump and at the nozzle. Refer to ASTM C1064. Notify Contractor supervision and the Engineer when mix temperatures start to exceed 85ºF. Discontinue shotcreting when the ambient air temperature falls below 40ºF or rises above 90ºF.

3. Shotcrete Mix Age: Determine and record shotcrete mix age for each load at the shotcrete pump and at the nozzle. Notify Contractor supervision and the Engineer when the age approaches ninety (90) minutes. Reject shotcrete in ready mixers and dump shotcrete in pump hoses when standing time for mix without "age extender" admixture exceeds ninety (90) minutes, or when standing time for mix with "age extender" exceeds the manufacturer's recommendations. If the mix consistency remains plastic, the mix temperature remains below 80ºF, and mix age does not exceed the manufacturer's recommendations, a mixed load with "age extender" admixtures may be shot.

4. Shotcrete Mix Slump: Measure and record shotcrete mix slump for each load at the shotcrete pump and at the nozzle. Notify Contractor supervision and the Engineer when slumps exceed the 3½ inch target limits, i.e., over 4½ inches or under 3 inches. Adjust shotcrete mix and "add" water accordingly.

B. Engineer's Materials Testing Laboratory's responsibility – The Engineer will perform the following:

1. Monitor shotcrete placement and test panels.

2. Production shotcrete compressive strength:

a. When delivered by the Contractor, prepare the test panels from production shotcrete for uniaxial compression, core strength testing and "core grading."

b. From each test panel, core and cut seven (7) sample cores (one set of four (4) cores unreinforced and one set of three (3) cores of WWF or bar reinforced).

c. Determine unit weight and test each set of unreinforced specimens for uniaxial compressive strength according to ASTM C1140 and construction testing requirements in ACI 506.2. Test one core at an age of seven (7) days and three cores at an age of twenty-eight (28) days. Mean core grades exceeding 2.5, or any individual core exceeding 3.0 shall be considered unsatisfactory. (Note: Strength of shotcrete sample will be considered satisfactory when the mean compressive strength of each set of three (3) unreinforced cores equals or exceeds eighty-five percent (85%) of specified compressive strength, with no individual core less than seventy-five percent (75%) of specified compressive strength.)

d. Visually inspect each set of reinforced shotcrete cores taken from test panels and determine mean "core grades" according to ACI 506.2.

e. Document and forward results of production shotcrete core and materials testing to the Contractor and Engineer by email.

3.15 SHOTCRETE REMOVAL AND REPAIRS

The Contractor shall execute the following:

A. Core Grade and In-place Visual Quality Results: Remove and reapply shotcrete placed as part of this Work that is delaminated or exhibits laminations, voids, or sand/rock pockets exceeding limits for specified core grade of shotcrete. Remove unsound or loose materials and contaminants that may inhibit bond of shotcrete repairs. Chip or scarify areas to be repaired to extent necessary to provide sound substrate. Cut edges square and ½ inch deep at perimeter of the defective work, tapering remaining shoulder at 1:1 slope into cavity to eliminate square shoulders. Dampen surfaces and apply new shotcrete.

B. Core Compressive Strength Results:

1. If directed by the Engineer, remove and reapply shotcrete placed as part of this Work in areas representing lower than acceptable shotcrete compressive strength. Shotcrete with very low strength shotcrete, excessive rebound entrapment and "honeycomb" would require shotcrete removal and reapplication.

2. If not directed by the Engineer, prepare defective shotcrete surface by high-pressure (+2,500 psi) hydrobrooming. Reapply another layer of shotcrete over defective shotcrete that equals or exceeds the original specified thickness.

3.16 CLEANING

The Contractor shall execute the following:

A. Final Shotcrete Surfaces: Remove and properly dispose of rebound and overspray materials from final shotcrete surfaces and areas not intended for shotcrete placement.

B. Invert: Remove and properly dispose of rebound and slough from the canal invert. Wash and clean invert and wall with water.

C. Refer to Specifications Section 02210 Site Preservation and Materials Disposal.

PART 4 - MEASUREMENT AND PAYMENT

4.01 METHOD OF MEASUREMENT

A. Quantities for portal shotcrete overlays shall be measured based on the square footage (SF) of the area covered.

B. Tunnel liner shotcrete shall be measured based on the length (LF) of the tunnel liner installed.

C. Theoretical shotcrete volume associated with the item listed in Article 4.01.B of this Specification Section shall be calculated by multiplying the area covered by the specified shotcrete thickness, and then applying a 25 percent overage factor. Backfill shotcrete shall be determined as the volume of actual shotcrete placed in excess of the theoretical shotcrete volume. Backfill shotcrete shall be measured by the cubic yard (CY) for local deviations from the theoretical excavation line as shown and noted on the Contract Drawings. The Contractor shall notify the Engineer in advance of placing backfill shotcrete in local deviations so the volume at each location can be determined during placement; backfill shotcrete shall not be measured or paid without Contractor notification in advance.

4.02 BASIS OF PAYMENT

A. Portal shotcrete overlays shall be paid by the Contract unit price per square-foot (SF) for respective items.

B. Tunnel liner shotcrete shall be paid by the Contract unit price per lineal foot (LF) of tunnel liner installed.

C. Backfill Shotcrete shall be paid by the Contract unit price per cubic yard (CY).

D. Incidentals: All other Work outlined in this Specification Section is considered incidental, therefore, not subject for payment, or is paid for under another Specification Section.

- END OF SECTION 03470 -

X:\Project\3000_prj\3818R OID Tunnel 8\Reports\Contract Docs_Specs\DIV 03\03470 Shotcrete 20210721.docx

REDUCED-SCALE DRAWINGS

OAKDALE IRRIGATION DISTRICT
SOUTH MAIN CANAL IMPROVEMENTS
TUNNEL 8 REHABILITATION

SCOPE OF WORK

1. WORK CONSISTS OF ENLARGING TUNNEL 8 AND INSTALLING A SHOTCRETE TUNNEL LINER AND CONCRETE INVERT.

2. THE WORK INCLUDES, BUT IS NOT LIMITED TO THE FOLLOWING (LISTED IN THE EXPECTED WORK SEQUENCE):

   A. INSTALL TEMPORARY WATER DIVERSION MEASURES IN THE CANAL
   B. DE-WATER TUNNEL 8 AND NEARBY CANAL AS NECESSARY
   C. ENLARGE UPSTREAM PORTAL AND PLACE SHOTCRETE LINING
   D. SCALE LOOSE ROCK AND ENLARGE TUNNEL 8 SIDEWALLS, CROWN AND INVERT PER PLAN
   E. PLACE NEW SHOTCRETE TUNNEL LINING CLOSELY BEHIND TUNNEL SCALING/ENLARGING AS WORK PROGRESSES
   F. REMOVE DEBRIS FROM THE TUNNEL (AT VARIOUS TIMES IN THE CONSTRUCTION SEQUENCE) AND DISPOSE OFFSITE
   G. ENLARGE DOWNSTREAM PORTAL AND PLACE SHOTCRETE LINING
   H. PLACE NEW CAST-IN-PLACE CONCRETE TUNNEL INVERT
   I. INSTALL FINAL EROSION CONTROL MEASURES

PROJECT SITE

TUNNEL 8: UPSTREAM PORTAL IS LOCATED APPROXIMATELY 1500 FEET DOWNSTREAM OF THE DOWNSTREAM PORTAL OF TUNNEL 7 (AT HIGHWAY 108 AND WILLMS ROAD).

THE WORK AREA IS NEAR KNIGHTS FERRY, CA - OAKDALE IRRIGATION DISTRICT, SOUTH MAIN CANAL, STANISLAUS COUNTY, CALIFORNIA - SEE VICINITY MAP AND DWG 2.0.

OWNER'S CONTACT:

OAKDALE IRRIGATION DISTRICT
1205 EAST F STREET
OAKDALE, CA 95361
ERIC THORBURN, P.E., WATER OPERATIONS MANAGER/DISTRICT ENGINEER
(209) 840-5525
ethorburn@oakdaleirrigation.com

ENGINEER'S CONTACT:

CONDOR EARTH (CONDOR)
21663 BRIAN LANE
SONORA, CA 95370
SCOTT LEWIS, CEG, PROJECT MANAGER
(209) 601-5585
slewis@condorearth.com

PREPARED BY:

CONDOR EARTH
21663 BRIAN LANE
SONORA, CA 95370
ANDREW S. KOSITSKY, PE, GE
(209) 728-4573
akositsky@condorearth.com

NOTES

ACCESS

1. DRAWING 2.0 SHOWS ACCESS CONDITIONS.
2. THE CONTRACTOR SHALL PREPARE STAGING AND LAYDOWN AREAS FOR THE PROJECT AT THE ALLOWABLE LOCATIONS SHOWN ON THESE DRAWINGS AND ACCORDING TO THE CONTRACT DOCUMENTS.
3. THE CONTRACTOR IS RESPONSIBLE FOR MAINTAINING DISTRICT ACCESS ROADS DURING CONSTRUCTION.
4. THE CONTRACTOR SHALL KEEP SITE AND CANAL ACCESS ROUTES CLEAR OF DEBRIS, MATERIALS AND EQUIPMENT.
5. THE CONTRACTOR AND ALL OTHER PROJECT PERSONEL SHALL KEEP THE GATES AT WILLMS ROAD CLOSED AND LOCKED WHEN THEY ARE NOT ON SITE.
6. CONTRACTOR SHALL LIMIT VEHICLE USE OVER THE TUNNEL AND WITHIN THE PERMISSIBLE STAGING AREAS TO A D-8 DOZER OR LIGHTER. USE OF A FULLY LOADED CONCRETE TRUCK IS PERMISSIBLE. THE CONTRACTOR SHALL LIMIT SOIL STOCKPILE THICKNESS OVER THE TUNNEL TO 7 FEET.

GENERAL

1. ALL WORK SHALL TAKE PLACE WITHIN 50-FT. OF THE CANAL CENTERLINE, WHICH IS THE OWNER'S RIGHT-OF-WAY, UNLESS NOTED OTHERWISE.
2. THE CONTRACTOR SHALL FURNISH ALL NECESSARY LABOR, MATERIALS, SUPPLIES, AND EQUIPMENT FOR CONSTRUCTION OF THE IMPROVEMENTS SHOWN IN THE CONTRACT DOCUMENTS.
3. THE OWNER SHALL RETAIN A CONSTRUCTION MATERIALS TESTING AND INSPECTION AGENCY (TESTING AGENCY) FOR THE REQUIRED TESTING AND INSPECTIONS. THE CONTRACTOR SHALL PROVIDE THE OWNER, THE ENGINEER (CONDOR), AND THE TESTING AGENCY AT LEAST TWO WORKING DAYS NOTICE PRIOR TO STARTING WORK.
4. WORKMANSHIP AND MATERIALS SHALL CONFORM TO THE REQUIREMENTS IN THE LATEST VERSIONS OF THE CALIFORNIA BUILDING CODE (CBC), CALTRANS STANDARD SPECIFICATIONS AND THE OAKDALE IRRIGATION DISTRICT STANDARD SPECIFICATIONS AND DRAWINGS. WORKMANSHIP AND MATERIALS SHALL CONFORM TO THE REQUIREMENTS OF STANISLAUS COUNTY, AND GOOD TRADE PRACTICE.
5. THE CONTRACTOR SHALL BE APPROPRIATELY LICENSED BY THE STATE OF CALIFORNIA TO PERFORM THE WORK SHOWN/DESCRIBED IN THE CONSTRUCTION DOCUMENTS AND SHALL BE EXPERIENCED IN THESE TYPES OF WORK.
6. THE CONTRACTOR SHALL SECURE NECESSARY PERMITS FROM AGENCIES, AS NECESSARY, BEFORE CONSTRUCTION, INCLUDING FROM CAL/OSHA MINING AND TUNNELING UNIT AND ARRANGE THE REQUIRED PRE-JOB MEETING WITH CAL/OSHA.
7. THE CONTRACTOR SHALL NOTIFY UNDERGROUND SERVICE ALERT (USA) BEFORE STARTING EARTHWORK, DRILLING GROUND, AND OTHER EXCAVATION WORK, AND THEY SHALL NOT BEGIN EXCAVATION UNTIL THE USA-INDICATED EARLIEST START DATE AND TIME.
8. THE CONTRACTOR SHALL RENEW USA TICKETS BEFORE THEY EXPIRE AND MAINTAIN UNTIL COMPLETION OF EXCAVATION WORK.
9. THE CONTRACTOR IS RESPONSIBLE FOR VERIFYING EXISTING UTILITIES IN THE FIELD. COSTS OF REPAIRING ANY DAMAGES OR INJURIES CAUSED BY THE CONTRACTOR SHALL BE BORNE BY THE CONTRACTOR.
10. THE CONTRACTOR SHALL KEEP EXISTING UTILITIES IN SERVICE AT ALL TIMES OR COORDINATE REQUIRED UTILITY SHUT-DOWNS WITH THE OWNER AND THE UTILITY OWNERS.
11. THE CONTRACTOR SHALL PROTECT EXISTING MONUMENTS, FACILITIES AND IMPROVEMENTS FROM DAMAGE RESULTING FROM CONTRACTOR'S WORK. ANY DAMAGE CAUSED BY CONTRACTOR SHALL BE REPAIRED AT THE CONTRACTOR'S EXPENSE. ANY EXISTING MONUMENTS THAT MUST BE REMOVED DURING THE WORK SHALL BE REPLACED BY THE OWNER.
12. THE CONTRACTOR SHALL REVIEW THE WORK SCOPE AND NOTIFY THE OWNER AND CONDOR IF THE DESIGN CREATES SAFETY CONCERNS.
13. THE CONTRACTOR IS SOLELY AND COMPLETELY RESPONSIBLE FOR JOB SITE CONDITIONS DURING THE COURSE OF CONSTRUCTION FOR THIS PROJECT, INCLUDING SAFETY OF PERSONS AND PROPERTY. THIS REQUIREMENT SHALL APPLY CONTINUOUSLY AND SHALL NOT BE LIMITED TO NORMAL WORKING HOURS.
14. CONDOR AND OWNER ARE NOT RESPONSIBLE FOR CONSTRUCTION MEANS, METHODS, TECHNIQUES, SEQUENCES, OR PROCEDURES FOR SAFETY PRECAUTIONS.
15. SHOULD ANY CONTRACTOR OR SUBCONTRACTOR FIND DEFICIENCIES, ERRORS, CONFLICTS OR OMISSIONS IN THESE CONTRACT DRAWINGS OR THE CONTRACT SPECIFICATIONS OR SHOULD THERE BE ANY DOUBT AS TO THEIR MEANING OR INTENT, THE CONTRACTOR SHALL IMMEDIATELY NOTIFY THE ENGINEER.
16. WRITTEN DIMENSIONS TAKE PRECEDENCE OVER SCALED DIMENSIONS. IF THERE IS A CONFLICT, THEN NOTIFY THE ENGINEER TO OBTAIN A CLARIFICATION. NO DEVIATION OR SUBSTITUTION SHALL BE ALLOWED WITHOUT OBTAINING WRITTEN APPROVAL FROM THE ENGINEER.
17. FADED BACKGROUND REPRESENTS EXISTING TOPOGRAPHIC AND SITE FEATURES BASED ON GROUND SURVEYED TOPOGRAPHY FROM GIULIANI AND KULL, DRAWING FILE X-TOPO.DWG, DATED APRIL 9, 2009 AND AERIAL PHOTOGRAMMETRY PROVIDED BY TRI STATE PHOTOGRAMMETRY DRAWING FILE 09057.DWG, DATED MARCH 18, 2009. TOPOGRAPHIC SURVEY PERFORMED IN FEBRUARY, 2020 USING A TRIMBLE 5700 CENTIMETER-LEVEL GPS SYSTEM AND A LEICA TCR1103 TOTAL STATION. HORIZONTAL AND VERTICAL DATUM NAD 83 CALIFORNIA STATE PLANE ZONE 3 AND NAVD88, RESPECTIVELY.
18. BOUNDARY LINES SHOWN ON THESE DRAWINGS ARE APPROXIMATE AND ARE FOR REFERENCE ONLY.
19. THE DESIGN IS LIMITED TO THE WORK DESCRIBED IN THE CONTRACT DOCUMENTS. THESE DRAWINGS SHOW EXISTING IMPROVEMENTS FOR REFERENCE ONLY.
20. ALL USERS OF THESE DRAWINGS AGREE TO HOLD CONDOR HARMLESS FOR ANY AND ALL WORK THAT DOES NOT CONFORM TO REQUIREMENTS AND MINIMUM STANDARDS OF THE RELEVANT BUILDING CODE, LOCAL ORDINANCES, AND ACCEPTABLE STANDARDS.
21. CONDOR ASSUMES NO RESPONSIBILITY FOR THE PERFORMANCE OF PRODUCTS OR MATERIALS NOT SPECIFIED IN THESE DRAWINGS.
22. THE CONTRACTOR SHALL DISPOSE ALL DEMOLISHED MATERIALS, EXCAVATED MATERIALS, EXCESS CONSTRUCTION MATERIALS, AND OTHER WASTE LEGALLY AT AN OFFSITE LOCATION .

STORM WATER MANAGEMENT

1. THE CONTRACTOR IS RESPONSIBLE FOR CONSTRUCTING, MAINTAINING, OPERATING AND REMOVING TEMPORARY STORM WATER FACILITIES, MANAGING STORM WATER FLOWS, AND PREPARING AND IMPLEMENTING THE STORM WATER POLLUTION PROTECTION PLAN (SWPPP).

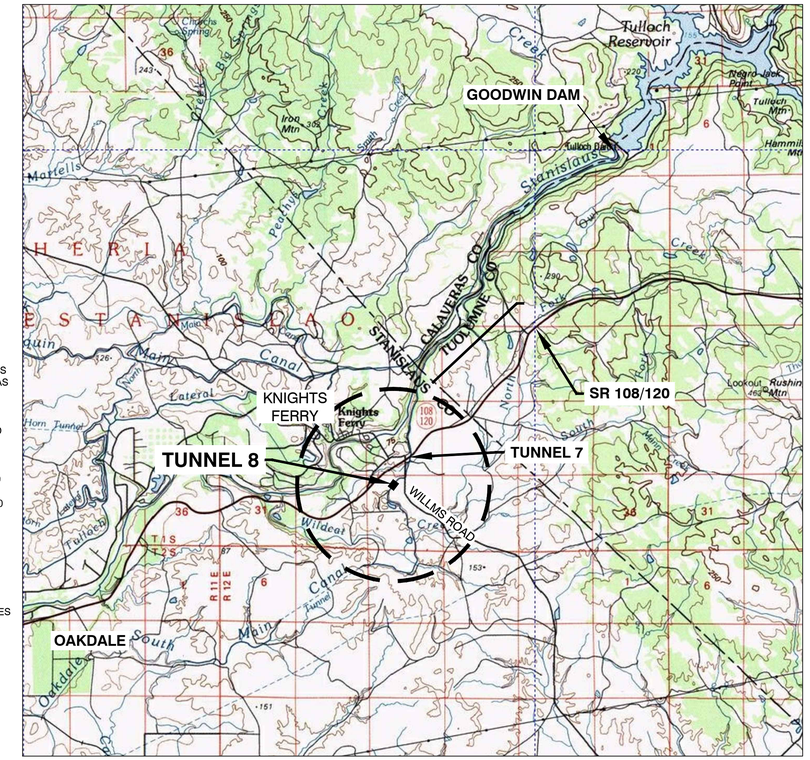

Vicinity Map 0 5000 SCALE IN FEET 1"=5000'

NORTH

DRAWING INDEX

LEGEND:

- CANAL ACCESS RAMP
- LOCKED GATE
- CLOSED GATE
- HIGH WATER LEVEL (APPROX.)
- Ø DIAMETER

SYMBOLS

SECTION AND ELEVATION

- 1 / SW3.0 — SECTION/ELEVATION/DETAIL IDENTIFICATION; SECTION/ELEVATION/DETAIL LOCATION
- C — DETAIL REFERENCE, SAME DRAWING

REVISION

- 1 — REVISION NUMBER
- AREA OF REVISION

ABBREVIATIONS:

AB	AGGREGATE BASE ROCK	FDR	FULL DEPTH RECLAMATION	P.T.	POINT OF TANGENCY
AC	ASPHALTIC CONCRETE	FF	FINISH FLOOR GRADE	PRF	PAVEMENT REINFORCING FABRIC
AD	AREA DRAIN	FG	FINISH GRADE	PSI	POUNDS PER SQUARE INCH
AVE	AVERAGE	FL	FLOW LINE	PVC	POLYVINYL CHLORIDE PIPE
BBL	BARREL	FOC	FACE OF CONCRETE	P.W.	PROCESS WASTE
BF	BOTTOM OF FOOTING	FS	FINISH SURFACE	R	RADIUS
BHC	BEGIN HORIZONTAL CURVE	FRC	FIBER REINFORCED CONCRETE	RCP	REINFORCED CONC. PIPE
BK	BOTTOM OF KEY	FRS	FIBER REINFORCED SHOTCRETE	S	SLOPE
BW	BOTTOM OF WALL	FT	FOOT	SCH	SCHEDULE
CDF	CONTROLLED DENSITY FILL	GB	GRADE BREAK	SD	STORM DRAIN
CIP	CAST-IN-PLACE	GAL	GALLON	SF	SQUARE FEET
CPP	CORRUGATED PLASTIC PIPE	HMA	HOT MIX ASPHALT	SG	SUBGRADE
℄	CENTER LINE	INV	INVERT	SS	SANITARY SEWER
CMP	CORRUGATED METAL PIPE	IN	INCH	SAD	SEE ARCHITECTURAL DOCUMENTS
CPP	CORRUGATED PLASTIC PIPE	ID	INSIDE DIAMETER	SCD	SEE CIVIL DOCUMENTS
CONC	CONCRETE	LBS	POUNDS	SLD	SEE LANDSCAPE DOCUMENTS
CY	CUBIC YARD	LCC	LOW DENSITY CELLULAR CONCRETE	SMD	SEE MECHANICAL DOCUMENTS
DI	DROP INLET	LF	LINEAR FEET	SSD	SEE STRUCTURAL DOCUMENTS
DIA	DIAMETER	MAX	MAXIMUM	STA	STATION
ø	DIAMETER	MH	MANHOLE	SWPPP	STORM WATER POLLUTION PREVENTION PLAN
DL	DESIGN LOAD	MIN	MINIMUM		
(E)	EXISTING	(N)	NEW	TC	TOP OF CONCRETE
EF	EACH FACE	OC	ON CENTER	TBD	TO BE DETERMINED
EG	EXISTING GROUND	(P)	PROPOSED	TF	TOP OF FOOTING
EHC	END HORIZONTAL CURVE	P.C.	POINT OF CURVATURE	TYP	TYPICAL
EL	ELEVATION	P.C.C.	POINT OF COMPOUND CURVATURE	TW	TOP OF WALL
ELEC	ELECTRICAL	P.I.	POINT OF INTERSECTION	U.N.O.	UNLESS NOTED OTHERWISE
ES	EACH SIDE	PIP	PROTECT IN PLACE	V.I.F.	VERIFY IN FIELD
EW	EACH WAY	⅊	PLATE OR PROPERTY LINE	W	WIDTH
ETW	EDGE OF TRAVELED WAY	P.R.C.	POINT OF REVERSE CURVATURE	WWF	WELDED WIRE FABRIC

REGISTERED PROFESSIONAL ENGINEER ANDREW S. KOSITSKY GE 2532 EXP. 12/31/2022 GEOTECHNICAL STATE OF CALIFORNIA

07/21/2021

REV#	DATE	BY	DESCRIPTION
0	07.21.2021	ASK	FOR BIDDING

OAKDALE IRRIGATION DISTRICT

SOUTH MAIN CANAL IMPROVEMENTS
TUNNEL 8 REHABILITATION

COVER SHEET, NOTES AND DRAWING INDEX

CONDOR EARTH
21663 Brian Lane
P.O. Box 3905
Sonora, CA 95370
(209) 532-0361
fax(209) 532-0773
www.condorearth.com

DWG 1.0

JOB#: 3818R	DRAWN: KGM	SCALE: AS SHOWN
PRINTED:	CHECKED: KW	FILE: 3818R_D1

X:\Project\3000_prj\3818R OID Tunnel 8\3818R_CAD\DWG\R0 FOR BIDDING\3818R_D1.dwg 7-19-21 01:33:59 PM kmcakinley

SHOTCRETE:

1. REFER TO CONTRACT SPECIFICATION SECTION 03470 FOR SHOTCRETE.
2. DIMENSIONS SHOWN IN DETAILS ARE TYPICAL.
3. SHOTCRETE SHALL HAVE A MINIMUM COMPRESSIVE STRENGTH OF 4,000 PSI AT 28 DAYS.
4. ADD SYNTHETIC FIBER TO SHOTCRETE AT A RATE OF 4 LBS/CU. YD. PER MANUFACTURER'S SPECIFICATIONS.
5. ADD FLY ASH OR SLAG AT A RATE OF 10% TO 25% OF PORTLAND CEMENT BY WEIGHT.
6. SHOTCRETE SHALL HAVE A GUN FINISH.
7. INSPECTION AND ACCEPTANCE BY ENGINEER OF SUBGRADES, SUBSURFACE DRAINAGE, REINFORCEMENT AND SHOTCRETE IS REQUIRED.
8. SHOTCRETE SHALL HAVE NO CONTRACTION JOINTS. THE FINISHES SHALL CONFORM TO PROJECT SHOTCRETE SPECIFICATIONS, OR AS DIRECTED BY CONDOR OR THE OWNER'S REPRESENTATIVE.

CONCRETE:

1. REFER TO CONTRACT SPECIFICATION SECTIONS 03070 AND 03300 FOR CONCRETE REINFORCEMENT AND CONCRETE.
2. CONCRETE SHALL HAVE A MINIMUM COMPRESSIVE STRENGTH OF 3,000 PSI AT 28 DAYS.
3. ADD SYNTHETIC FIBER TO CONCRETE FOR NEW INVERTS AND INVERT OVERLAYS AT RATE OF 4 LBS./CU. YD. PER MANUFACTURER'S SPECIFICATIONS.
4. ADD FLY ASH OR SLAG AT A RATE OF 10% TO 25% OF PORTLAND CEMENT BY WEIGHT.
5. CONCRETE FINISHES SHALL BE "U-1" PER CONTRACT SPECIFICATION SECTION 03300, UNLESS NOTED OTHERWISE.
6. INSPECTION AND ACCEPTANCE BY ENGINEER OF CONCRETE AND REINFORCEMENT IS REQUIRED.
7. TO REDUCE CONCRETE INVERT QUANTITIES, THE FOLLOWING CRITERIA SHALL BE USED: LOCAL INVERT HARD ROCK GROUND RESULTING IN MINIMUM 4-INCH THICKNESS OF CONCRETE ARE ACCEPTABLE, "PONDS" OF LESS THAN 12 INCHES IN DEPTH ARE ACCEPTABLE.
8. CONTRACTOR SHALL LAY OUT FINAL INVERT GRADES FOR ACCEPTANCE BY ENGINEER PRIOR TO PLACEMENT OF CONCRETE INVERT.
9. PROVIDE MINIMUM 0.5-INCH DEPTH SAW CUT CONTRACTION JOINTS AT 15-FEET ON-CENTER MAXIMUM.

INSPECTIONS TABLE:

ITEM	TYPE (INSPECTION / TEST) BLANK IF NOT REQUIRED OR NOT APPLICABLE	DESCRIPTION (PERIODIC / CONTINUOUS INSPECTION OR TEST FREQUENCY)	GOVERNING CODE FOR SPECIAL INSPECTIONS AND TEST METHODS	NOTES
TUNNEL EXCAVATION	INSPECTION	PERIODIC		
TUNNEL LINER SHOTCRETE	INSPECTION	PROPER MIX DESIGN VERIFICATION	CBC 1705.3 ACI 318: CH.19, 26.4.3, 26.4.4	
TUNNEL LINER SHOTCRETE PLACEMENT	INSPECTION	PERIODIC - ONE PER SHIFT PER 50 CUBIC YARDS PLACED	CBC 1705.3 ACI 318:26.4.5	
TUNNEL LINER SHOTCRETE	TESTS	20 BY 20 BY 5.5-INCH PANEL PER 50 CUBIC YARDS PLACED	CBC 1705.3 IBC 1908.10 ACI 318:26.4.5, 28.12 ASTM C177, C31	
INVERT SUBGRADE	INSPECTION	PERIODIC	CBC 1705.6	
TUNNEL CONCRETE INVERT	QUALITY ASSURANCE	PROPER MIX DESIGN VERIFICATION		
TUNNEL CONCRETE INVERT/FOOTING PLACEMENT	INSPECTION	PERIODIC	CBC 1705.3, A4318: 26.4.5	

REGISTERED PROFESSIONAL ENGINEER
ANDREW S. KOSTISAK
GE 2532
EXP: 12/31/2022
GEOTECHNICAL
STATE OF CALIFORNIA

07/21/2021

REV#	DATE	BY	DESCRIPTION
0	07.21.2021	ASK	FOR BIDDING

OAKDALE IRRIGATION DISTRICT

SOUTH MAIN CANAL IMPROVEMENTS
TUNNEL 8 REHABILITATION

NOTES

CONDOR EARTH
21663 Brian Lane
P.O. Box 3905
Sonora, CA 95370
(209) 532-0361
fax(209) 532-0773
www.condorearth.com

DWG 1.1

JOB#: 3818R	DRAWN: KGM	SCALE: AS SHOWN
PRINTED:	CHECKED: KW	FILE: 3818R_D1

X:\Project\3000_proj\3818R OID Tunnel 8\3818R_CAD\DWG\R0 FOR BIDDING\3818R_D1.dwg 7-19-21 01:28:05 PM kmckinley

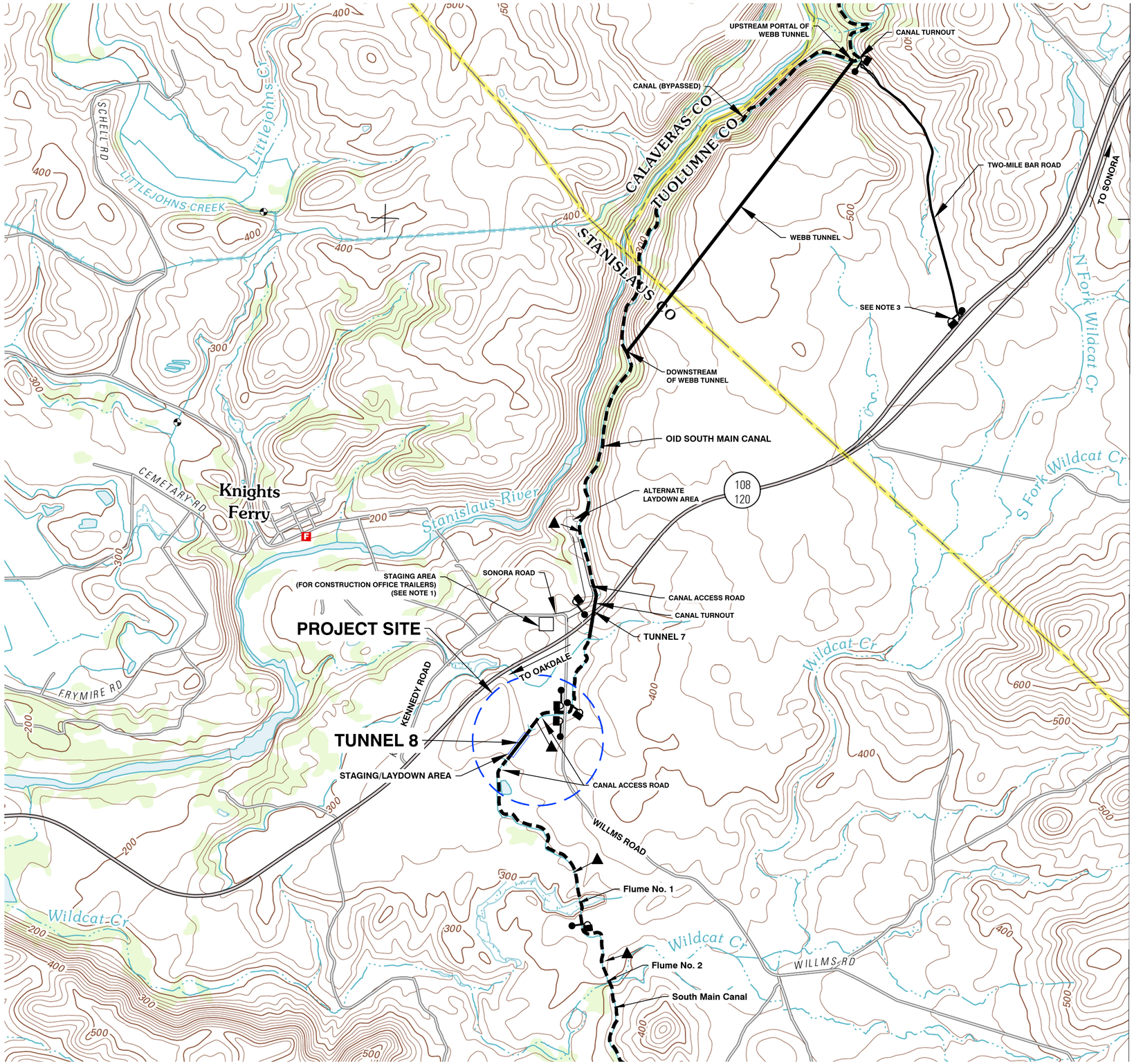

BACKGROUND IMAGE: USGS 7.5 MINUTE QUADRANGLE, KNIGHTS FERRY 2012

DISCLAIMER: THIS PLAN REPRESENTS FEATURES FOR ILLUSTRATION PURPOSES ONLY. IT IS NOT A LEGAL SURVEY AND IS NOT INTENDED FOR USE IN DETERMINING BOUNDARIES OR DIMENSIONS. ANY USE OF THIS PLAN FOR PURPOSES OTHER THAN LOCATION OF FEATURES IS DONE SO AT THE USER'S RISK AND WITHOUT THE CONSENT OF CONDOR EARTH.

N

800 0 1600

SCALE IN FEET

LEGEND

- CANAL ACCESS RAMP
- LOCKED GATE

NOTES

1. SONORA ROAD STAGING AREA, IF USED FOR OFFICE TRAILERS, SHALL BE IMPROVED BY CONTRACTOR BY MINOR GRADING AND PLACEMENT OF AGGREGATE BASE ROCK, IF NECESSARY. SPECIFIC IMPROVEMENTS SHALL BE CONFIRMED BY OWNER PRIOR TO CONSTRUCTION.
2. STAGING/LAYDOWN AREA AT TUNNEL 8 LIMITED TO 100-FOOT WIDE OID RIGHT-OF-WAY; CONTRACTOR TO PROVIDE MINOR GRADING AND PLACEMENT OF AGGREGATE BASE ROCK AS NECESSARY.
3. GATE AT TWO MILE BAR ROAD LOCKED BY US ARMY CORPS OF ENGINEERS AT CERTAIN TIMES.
4. THE CANAL TURNOUTS UPSTREAM OF THE PROJECT SITE ARE LOCATED NEAR THE UPSTREAM PORTALS OF THE WEBB TUNNEL AND TUNNEL 7, AS SHOWN, MAY BE USED AT CONTRACTOR'S DISCRETION FOR STORM WATER CONVEYANCE TO THE STANISLAUS RIVER.

REGISTERED PROFESSIONAL ENGINEER ANDREW S. KOSTKAS GE 2532 EXP: 12/31/2022 GEOTECHNICAL STATE OF CALIFORNIA

07/21/2021

REV#	DATE	BY	DESCRIPTION
0	07.21.2021	ASK	FOR BIDDING

OAKDALE IRRIGATION DISTRICT

SOUTH MAIN CANAL IMPROVEMENTS
TUNNEL 8 REHABILITATION

OVERALL SITE PLAN
TUNNEL 8

CONDOR EARTH
21663 Brian Lane
P.O. Box 3905
Sonora, CA 95370
(209) 532-0361
fax(209) 532-0773
www.condorearth.com

DWG 2.0

JOB#: 3818R	DRAWN: KGM	SCALE: AS SHOWN
PRINTED:	CHECKED: KW	FILE: 3818R_D2

X:\Project\3000_jn\3818R OID Tunnel 8\3818R_CAD\DWG\R0 FOR BIDDING\3818R_D2.dwg 7-19-21 01:24:13 PM kmckinley

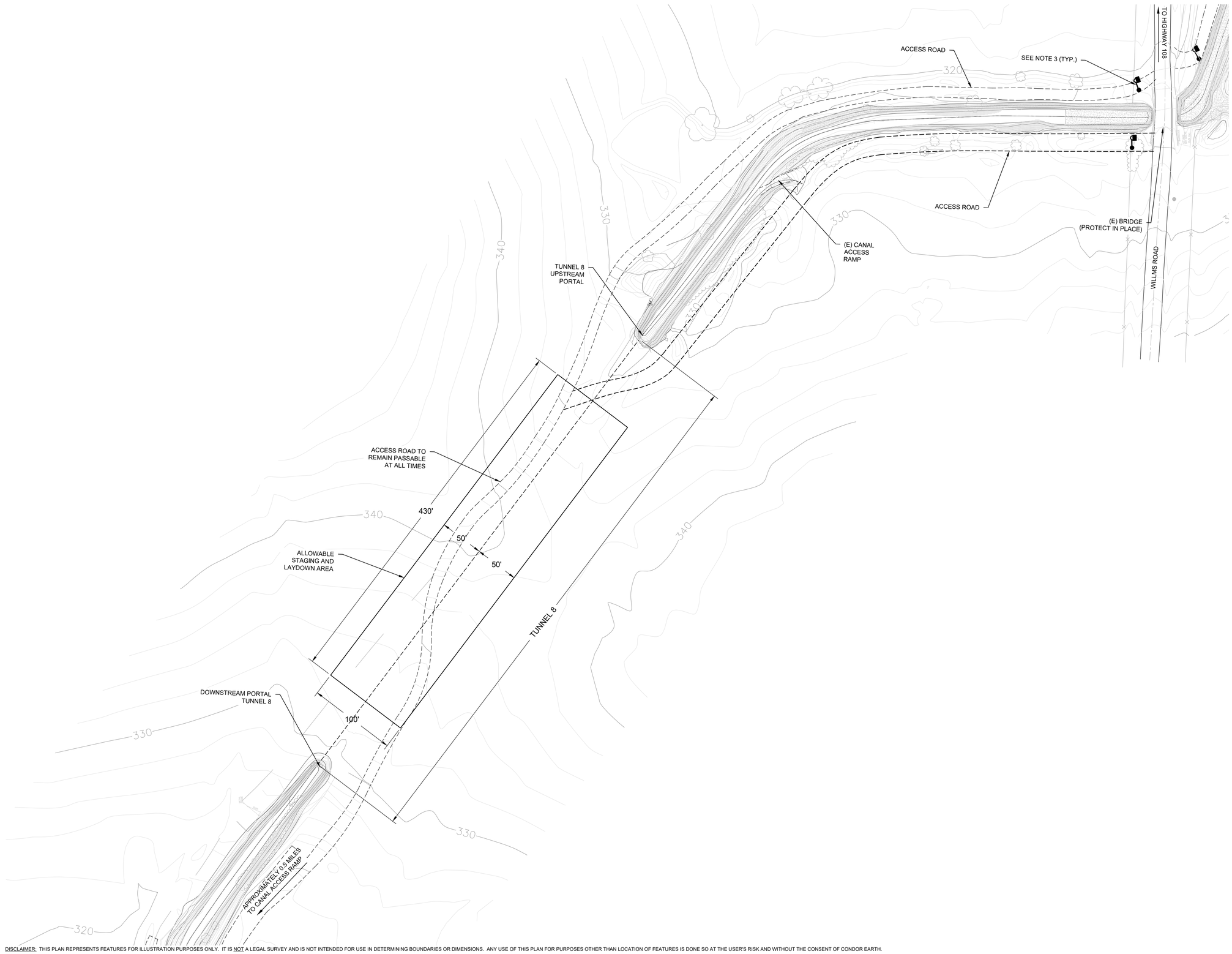

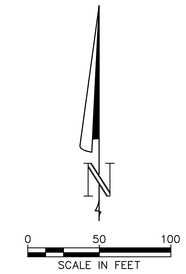

NOTES

1. CONTRACTOR IS RESPONSIBLE FOR PROTECTING EXISTING FACILITIES FROM DAMAGE DURING CONSTRUCTION, INCLUDING BRIDGES, ACCESS ROADS, AND CANAL ACCESS RAMPS.
2. ACTUAL LOCATION AND LIMITS OF REPAIRS TO BE VERIFIED BY ENGINEER DURING CONSTRUCTION.
3. KEEP ACCESS GATES CLOSED AND LOCKED WHEN NOT ON SITE.

07/21/2021

REV#	DATE	BY	DESCRIPTION
0	07.21.2021	ASK	FOR BIDDING

OAKDALE IRRIGATION DISTRICT

SOUTH MAIN CANAL IMPROVEMENTS
TUNNEL 8 REHABILITATION

TOPOGRAPHIC SITE PLAN
TUNNEL 8

CONDOR EARTH
21663 Brian Lane
P.O. Box 3905
Sonora, CA 95370
(209) 532-0361
fax(209) 532-0773
www.condorearth.com

DWG
3.0

JOB#: 3818R	DRAWN: KGM	SCALE: AS SHOWN
PRINTED:	CHECKED: KW	FILE: 3818R_D3

X:\Project\3000_prj\3818R OID Tunnel 8\3818R_CAD\DWG\R0 FOR BIDDING\3818R_D3.dwg 7-19-21 01:18:22 PM kmckinley

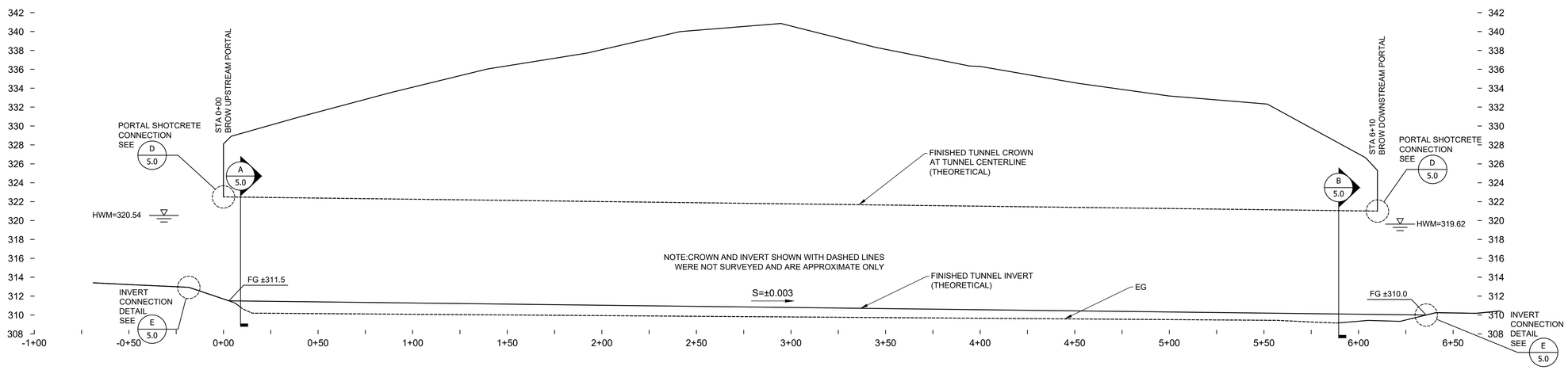

1 TUNNEL 8 PROFILE

HORIZ. 0 30 SCALE IN FEET
VERT. 0 6 SCALE IN FEET
SCALE: AS SHOWN

A UPSTREAM PORTAL
SCALE: N.T.S.

B DOWNSTREAM PORTAL
TYPICAL DOWNSTREAM TUNNEL SECTION
SCALE: N.T.S.

NOTES:

1. PREPARE EXISTING SHOTCRETE SURFACE AT TUNNEL PORTALS BY REMOVING LOOSE DEBRIS AND THOROUGHLY PRESSURE-WASHING. ENGINEER TO DETERMINE EXTENT OF PORTAL SHOTCRETE OVERLAY IN FIELD.
2. SEE DETAIL D ON SHEET 5.0 FOR PORTAL SHOTCRETE-TUNNEL LINER CONNECTION DETAIL.

REGISTERED PROFESSIONAL ENGINEER ANDREW S. KOSTESKY GE 2532 EXP. 12/31/2022 GEOTECHNICAL STATE OF CALIFORNIA

07/21/2021

REV#	DATE	BY	DESCRIPTION
0	07.21.2021	ASK	FOR BIDDING

OAKDALE IRRIGATION DISTRICT

SOUTH MAIN CANAL IMPROVEMENTS
TUNNEL 8 REHABILITATION

PROFILE AND PORTALS
TUNNEL 8

CONDOR EARTH
21663 Brian Lane
P.O. Box 3905
Sonora, CA 95370
(209) 532-0361
fax(209) 532-0773
www.condorearth.com

DWG 4.0

JOB#: 3818R	DRAWN: KGM	SCALE: AS SHOWN
PRINTED:	CHECKED: KW	FILE: 3818R_D4

X:\Project\3000_prj\3818R OID Tunnel 8\3818R_CAD\DWG\R0 FOR BIDDING\3818R_D4.dwg 7-19-21 12:12:47 PM kmckinley

BACKGROUND INFORMATION: ERIK OHLSON AND ASSOCIATES, FILE 2001c OID T8.dwg, RECEIVED 04/28/2020.

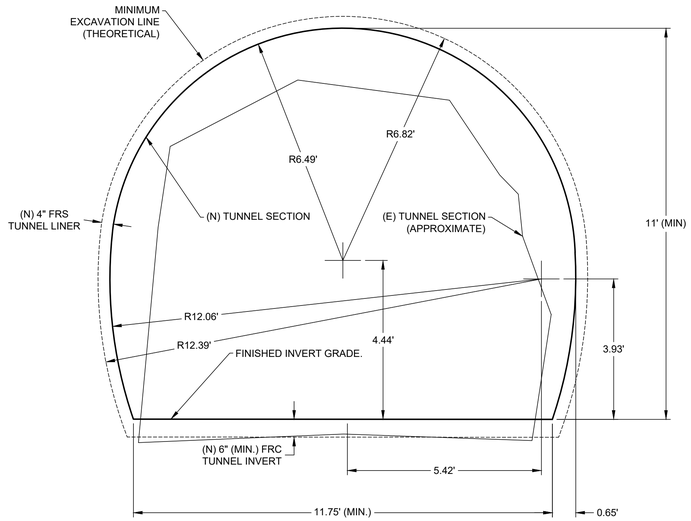

A **FINISHED TUNNEL SECTION - UPSTREAM**
UPSTREAM TUNNEL SECTION
0 2 SCALE IN FEET
SCALE: AS SHOWN

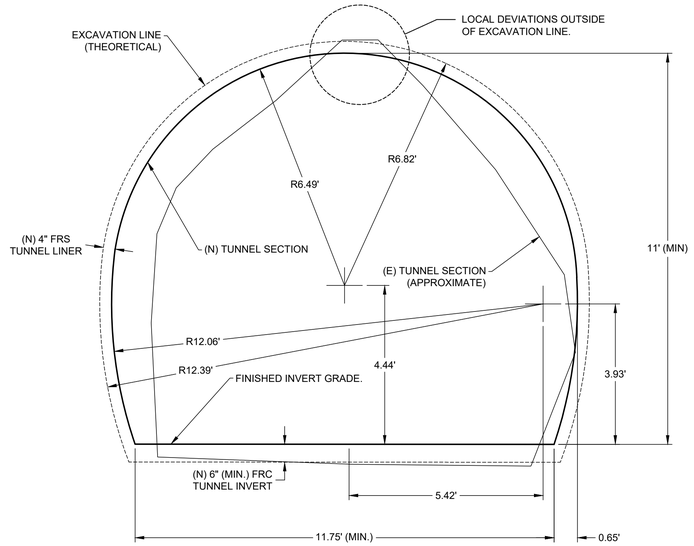

B **FINISHED TUNNEL SECTION - DOWNSTREAM**
DOWNSTREAM TUNNEL SECTION
0 2 SCALE IN FEET
SCALE: AS SHOWN

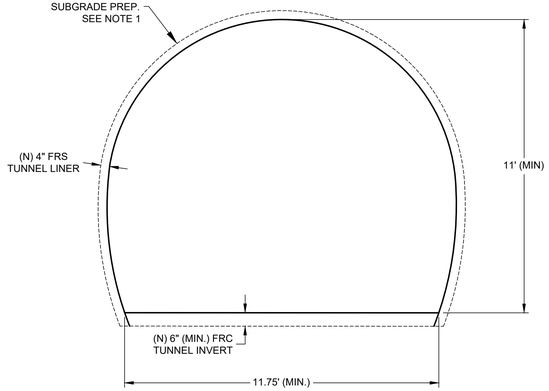

C **NEW TUNNEL LINER AND INVERT**
TYPICAL SECTION
SCALE: N.T.S.

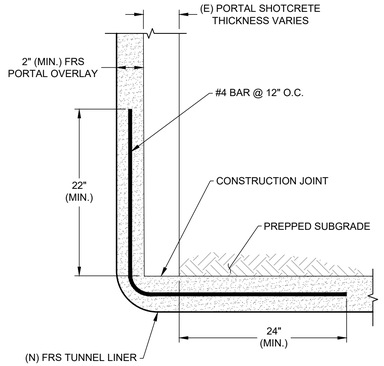

D **PORTAL SHOTCRETE CONNECTION**
DETAIL PLAN AND SECTION
SCALE: N.T.S.

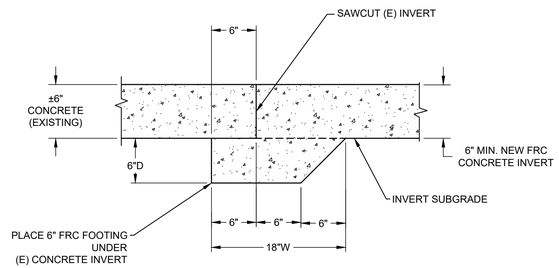

E **INVERT CONNECTION**
DETAIL
SCALE: N.T.S.

NOTES:

1. PREPARE SUBGRADE BY SCALING/ENLARGING THE TUNNEL SIDEWALLS, CROWN AND INVERT TO SUFFICIENT DIMENSIONS TO ACCOMMODATE TUNNEL LINER AND INVERT WITH MINIMUM DIMENSIONS SHOWN.
2. CONTRACTOR IS RESPONSIBLE FOR ADVANCING TUNNEL ENLARGING/SCALING ACTIVITIES SAFELY TO MINIMIZE OVER BREAK AND OTHER GROUND LOSS. USE OF A "FLASH COAT" OF SHOTCRETE FOR TEMPORARY SUPPORT IS PERMITTED BUT THICKNESS WILL NOT BE APPLIED TO MINIMUM STRUCTURAL LINER THICKNESS WITHOUT ENGINEER APPROVAL.
3. BACKFILL SHOTCRETE IS NOT REQUIRED FOR LOCAL DEVIATIONS FROM THE THEORETICAL EXCAVATION LINE MEASURING LESS THAN 12-INCHES BEYOND THE THEORETICAL EXCAVATION LINE. DEVIATIONS MAY RESULT FROM TUNNEL ENLARGING/SCALING ACTIVITIES, GROUND FALLOUT, OR MAY BE PRE-EXISTING. FOR LOCAL DEVIATIONS GREATER THAN 12-INCHES BEYOND THE THEORETICAL EXCAVATION LINE, THE ENGINEER IS TO DETERMINE IF BACKFILL SHOTCRETE IS NEEDED.

REGISTERED PROFESSIONAL ENGINEER
ANDREW S. KOSTISKY
GE 2532
EXP. 12/31/2022
GEOTECHNICAL
STATE OF CALIFORNIA

07/21/2021

REV#	DATE	BY	DESCRIPTION
0	07.21.2021	ASK	FOR BIDDING

OAKDALE IRRIGATION DISTRICT

SOUTH MAIN CANAL IMPROVEMENTS
TUNNEL 8 REHABILITATION

TUNNEL AND PORTAL DETAILS

CONDOR EARTH
21663 Brian Lane
P.O. Box 3905
Sonora, CA 95370
(209) 532-0361
fax(209) 532-0773
www.condorearth.com
CONDOR

DWG
5.0

JOB#: 3818R	DRAWN: KGM	SCALE: AS SHOWN
PRINTED:	CHECKED: KW	FILE: 3818R_D5

X:\Project\3000_prj\3818R OID Tunnel 8\3818R_CAD\DWG\RD FOR BIDDING\3818R_D5.dwg 7-19-21 12:06:28 PM kinckelley